MESAPOL®

Korkuluk Sistemleri

MESA
ALÜMİNYUM ve İNŞAAT SAN. TİC. LTD. ŞTİ.

www.mesapol.com

ÜRÜN KATALOĞU

PRODUCT CATALOGUE
CATALOGUES DES PRODUITS
CATALOGO DE PRODUCTOS

MESAPOL®
Korkuluk Sistemleri

Cam Sistemleri

Glass Systems

Systèmes En Verre

Sistemas De Vidrios

Siz Hayal Edin Biz Üretelim...
You Just Dream We Make It Real...

MESA
ALÜMİNYUM ve İNŞAAT SAN. TİC. LTD. ŞTİ.

GS-01

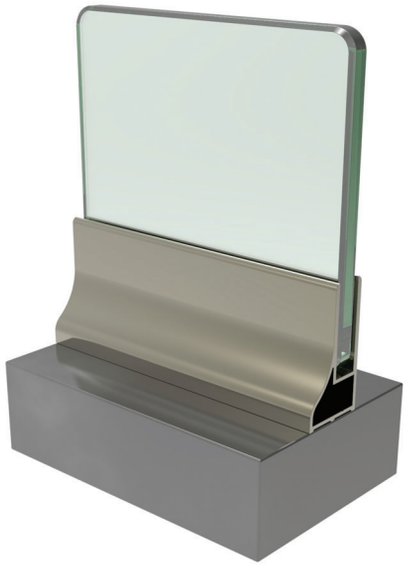

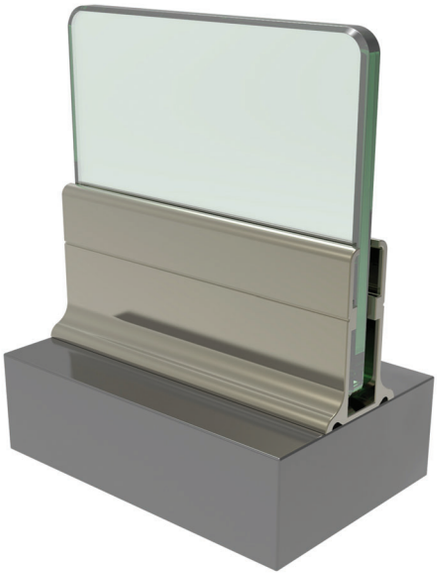

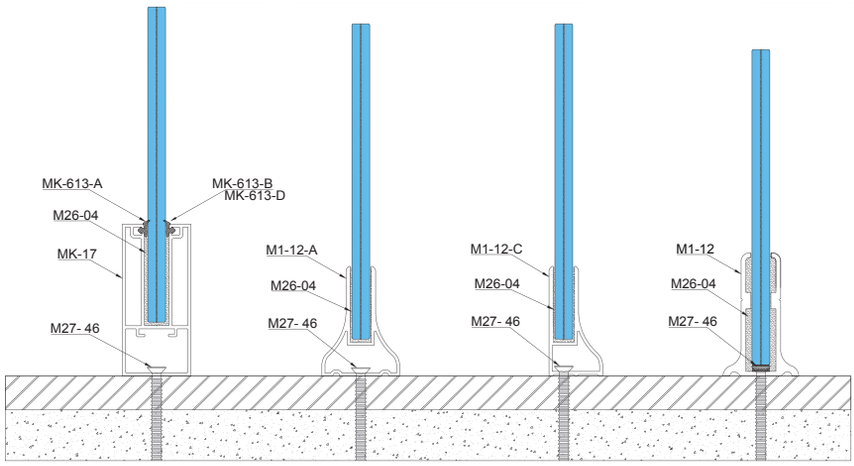
MK-613-A
MK-613-B
MK-613-D
M26-04
MK-17
M27- 46
M1-12-A
M26-04
M27- 46
M1-12-C
M26-04
M27- 46
M1-12
M26-04
M27- 46

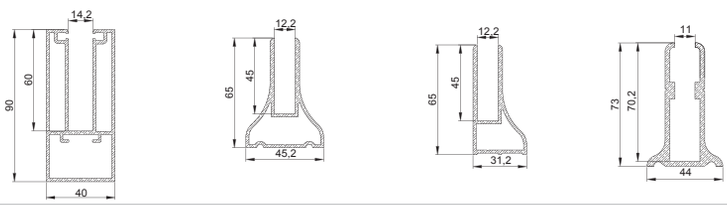
14,2
90
60
40
12,2
65
45
45,2
12,2
65
45
31,2
11
73
70,2
44

GS-01

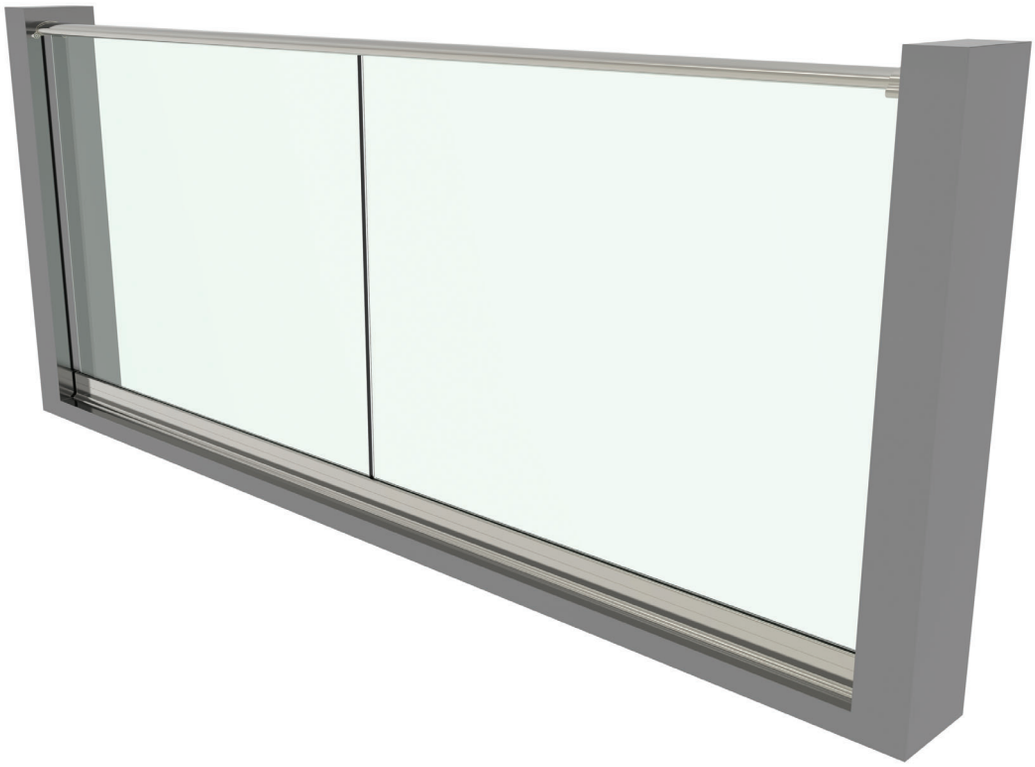

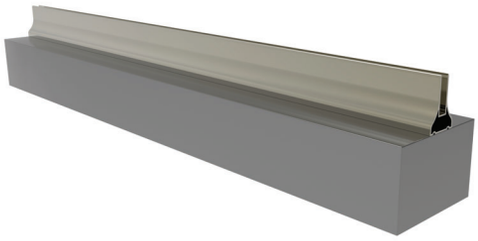

1

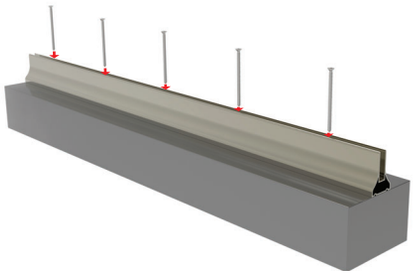

2

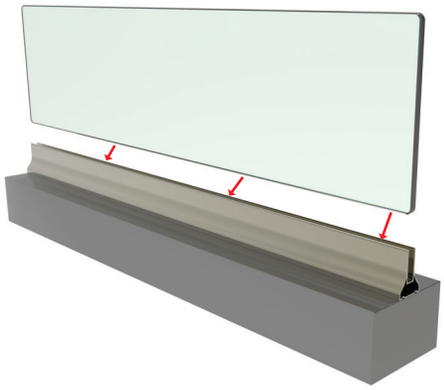

3

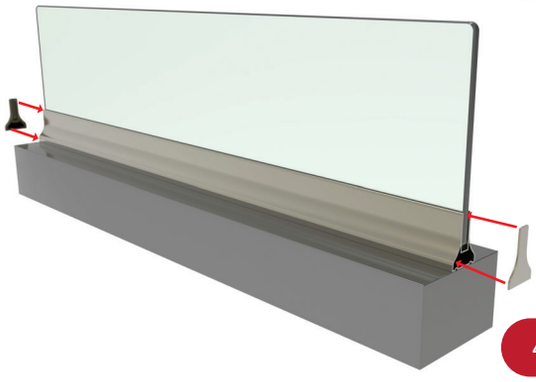

4

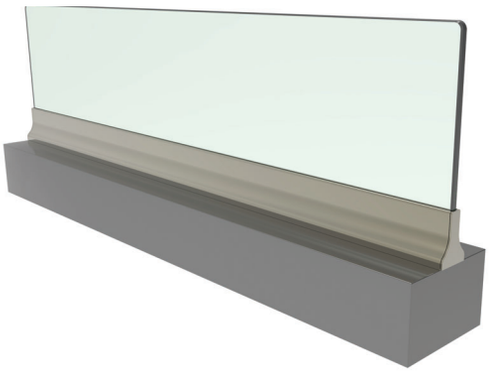

5

GS-01

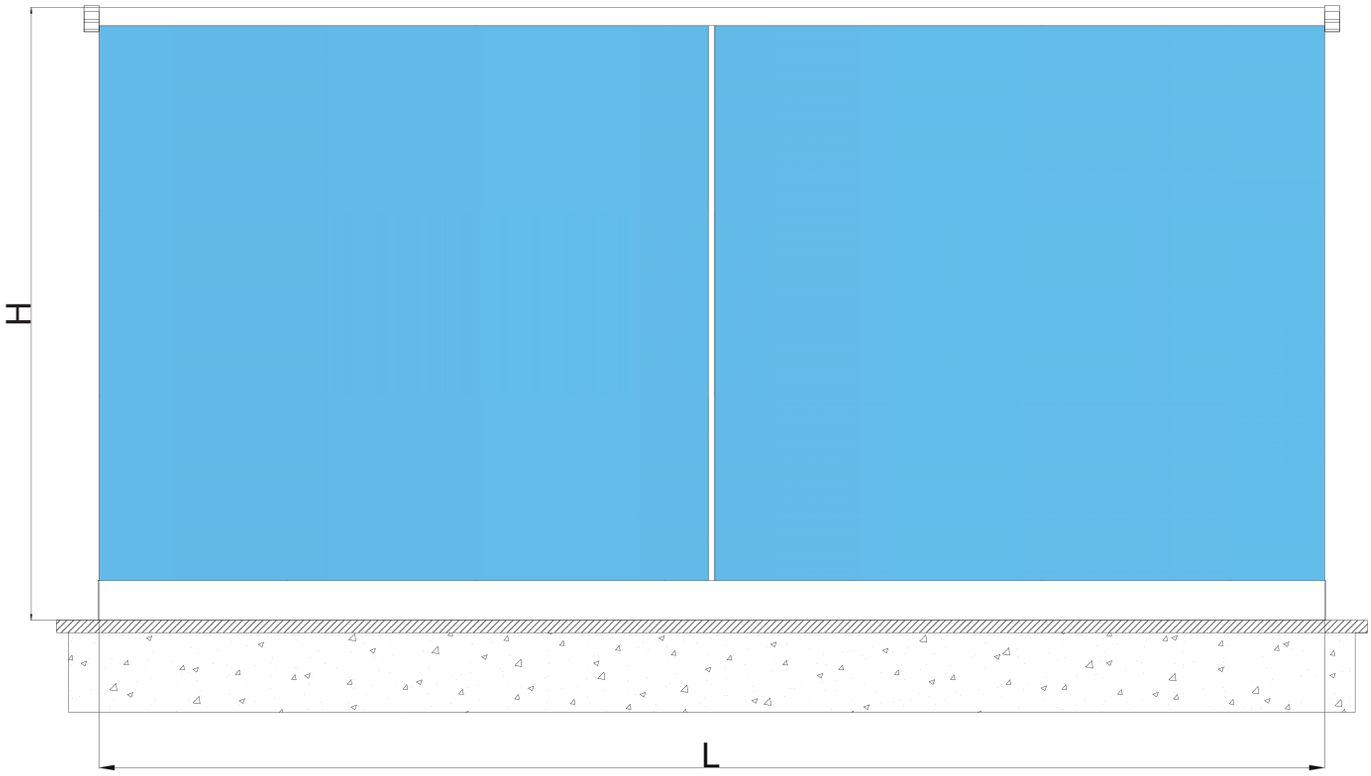

Cam Yüksekliği/H Glass Height/H Hauteur Verre/H Altura De Vidrio/H	Kalınlık (mm) Thickness (mm) Epaisseur (mm) Espesor (mm)	L	(kN)	(J)
0-1200 mm	(4+0,38+4),(5+0,38+5)	2500 mm	-	-
	(6+0,38+6)			
*Maksimum 2500 mm genişliğinde kullanılabilir ve üst profil kullanılarak iki duvar arasında montaj yapılmalı. *Can be used in maximum 2500 mm width and shall be installed between two walls using upper profile. *La longueur maximale applicable est de 2500 mm avec une main courante fixée aux murs des deux extrémités. *Se puede utilizar en un máximo de 2500 mm ancho y se debe instalar entre dos paredes utilizando el perfil superior.				

MK-17

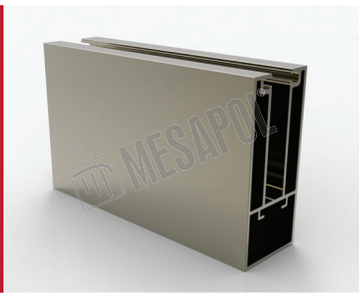

Dikdörtgen Etek Profili (12.6 kg / 6 mt)
Rectangular Bottom Profile (12.6 kg / 6 mt)
Profil de Sol Rectangulaire (12,60 kg / 6 mt)
Perfil Rectángulo (12,60 kg / 6 mt)

M1-12/A

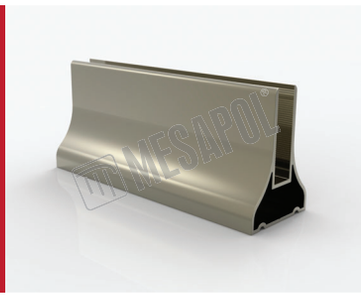

Eko Etek Profili (7.3 kg / 6 mt)
Eco Rectangular Profile(7.3 kg / 6 mt)
Profil de Sol (7,30 kg / 6 mt)
Perfil Base (7,30 kg / 6 mt)

M1-12/C

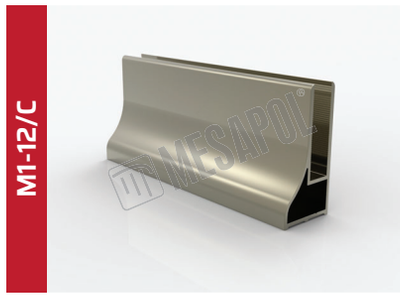

Eko Etek Profili Düz (6.5 kg / 6 mt)
Eco Rectangular Straight Profile (6.5 kg / 6 mt)
Profil de Sol (6,50 kg / 6 mt)
Perfil Base (6,50 kg / 6 mt)

M1-12

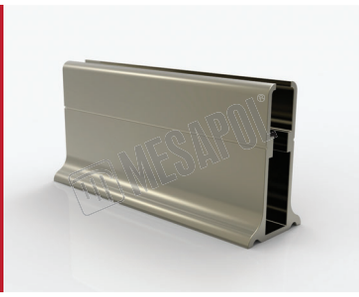

Camlı Korkuluk Alt Profili (11.4 kg / 6 mt)
Glazing Balustrade Base Profile (11.4 kg / 6 mt)
Profil de Sol (11,4 kg / 6 mt)
Perfil Base (11,4 kg / 6 mt)

M18-18/A

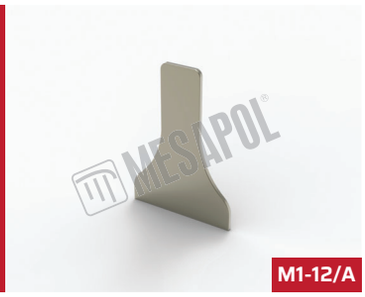

M1-12/A

Eko Etek Profil Kapağı
Eco Bottom Profile Plug
Embout de Finition Pour Support Verre
Tapa Perfil

M18-18/B

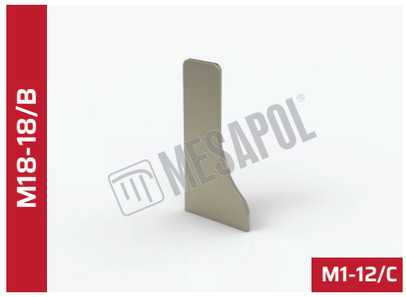

M1-12/C

Eko Etek Profil Kapağı Düz
Eco Straight Bottom Profile Plug
Embout de Finition Pour Support Verre
Tapa Perfil

M18-18

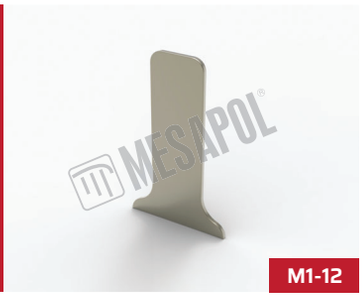

M1-12

Etek Profil Kapağı
Bottom Profile Plug
Embout de Finition Pour Support Verre
Tapa Final

MK-309

MK-17

Dikdörtgen Etek Profili Tapası
Rectangular Profile Plug
Embout de Profil de Sol Rectangulaire
Tapa Final

MK-613/A

8 - 10 mm Cam Fitili Dış (1 mt)
8-10 mm External Glass Gasket (1 mt)
8-10 mm Joint de Vitrage Extérieur (1 mt)
8-10 mm Goma de Vidrio Externa (1 mt)

MK-613/B

10 mm Cam Fitili İç (1 mt)
10 mm Glazing Gasket Inside (1 mt)
Joint de Vitrage Intérieur 10 mm (1 mt)
10 mm Goma de Vidrio İnterno (1 mt)

M27-46

7,5*150 Buldex Vida (Torx)
7,5*150 Buildex Torx Screw
7,5*150 Vis Buldex
7,5*150 Tornillo Torx Buildex

M27-46/A

7,5 Plastik Dübel
7,5 Plastic Anchor
Cheville en Plastique 7,5
7,5 Ancla Plástico

GS-02

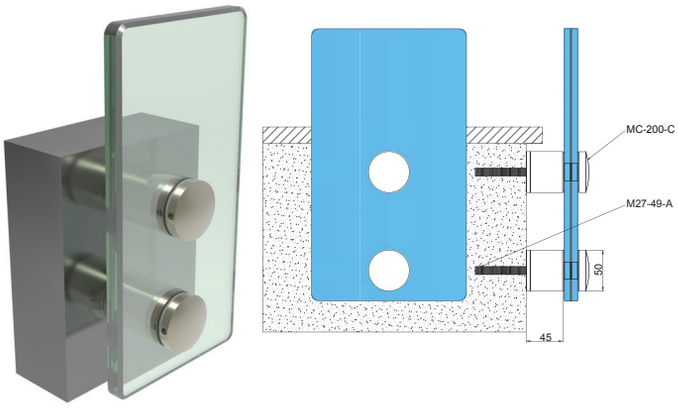
MC-200-C
M27-49-A
50
45

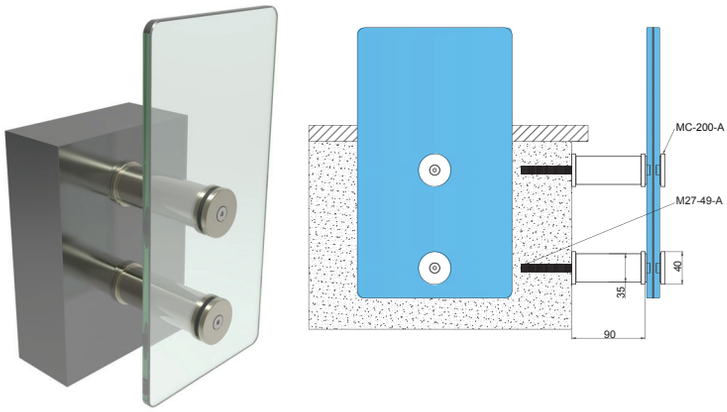
MC-200-A
M27-49-A
40
35
90

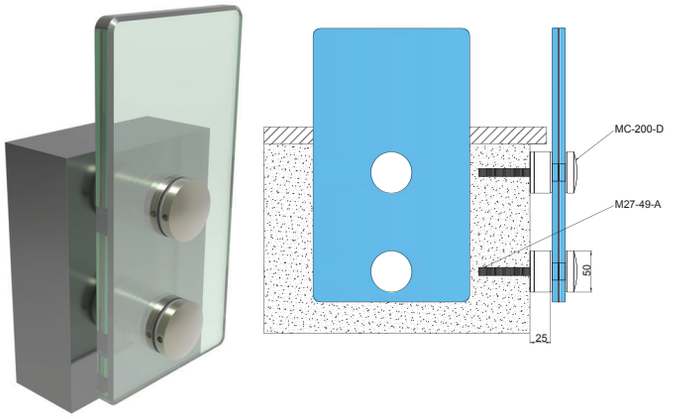
MC-200-D
M27-49-A
50
25

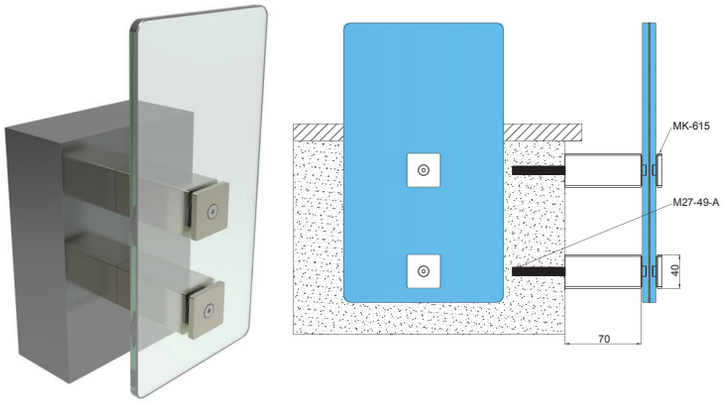
MK-615
M27-49-A
40
70

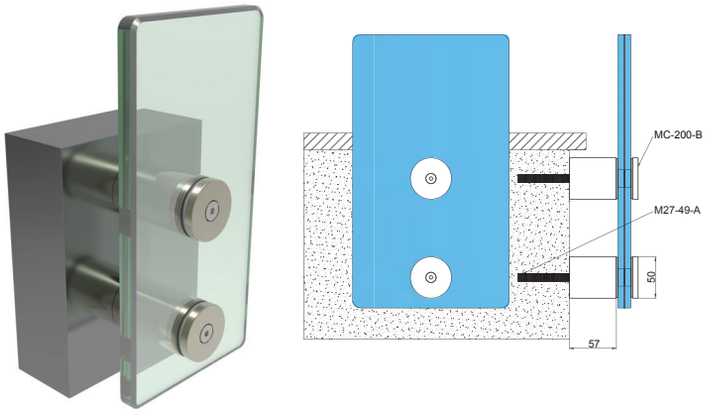
MC-200-B
M27-49-A
50
57

GS-02

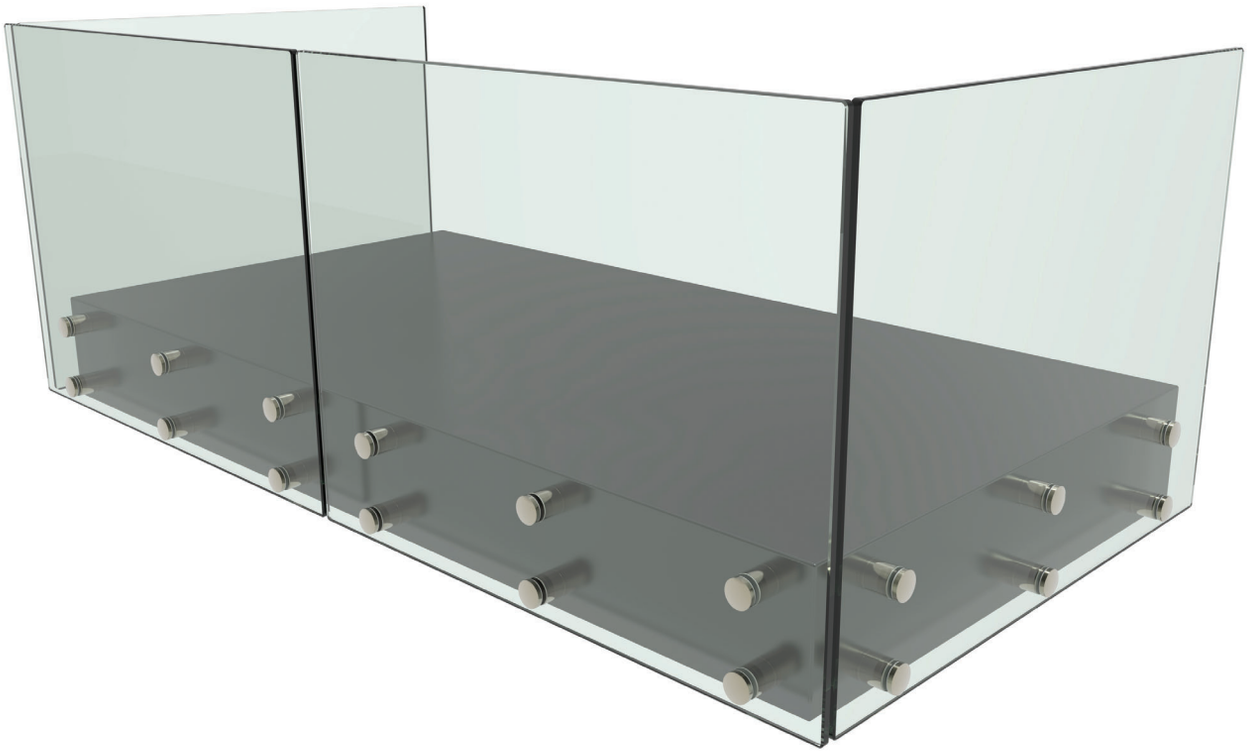

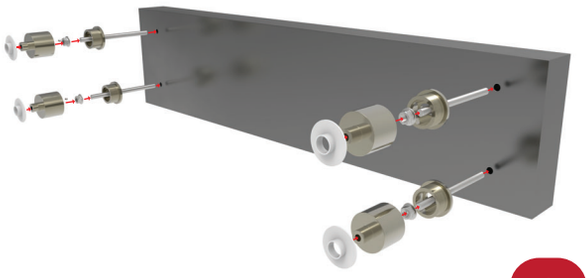

1

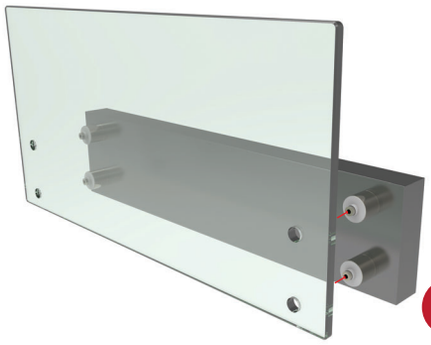

2

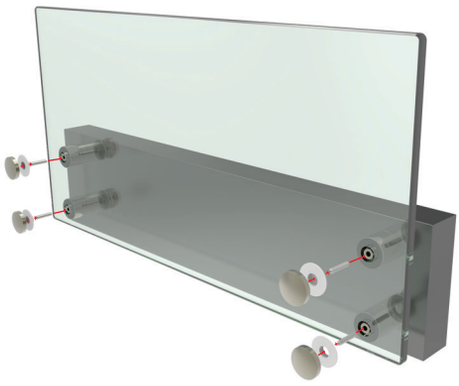

3

4

GS-02

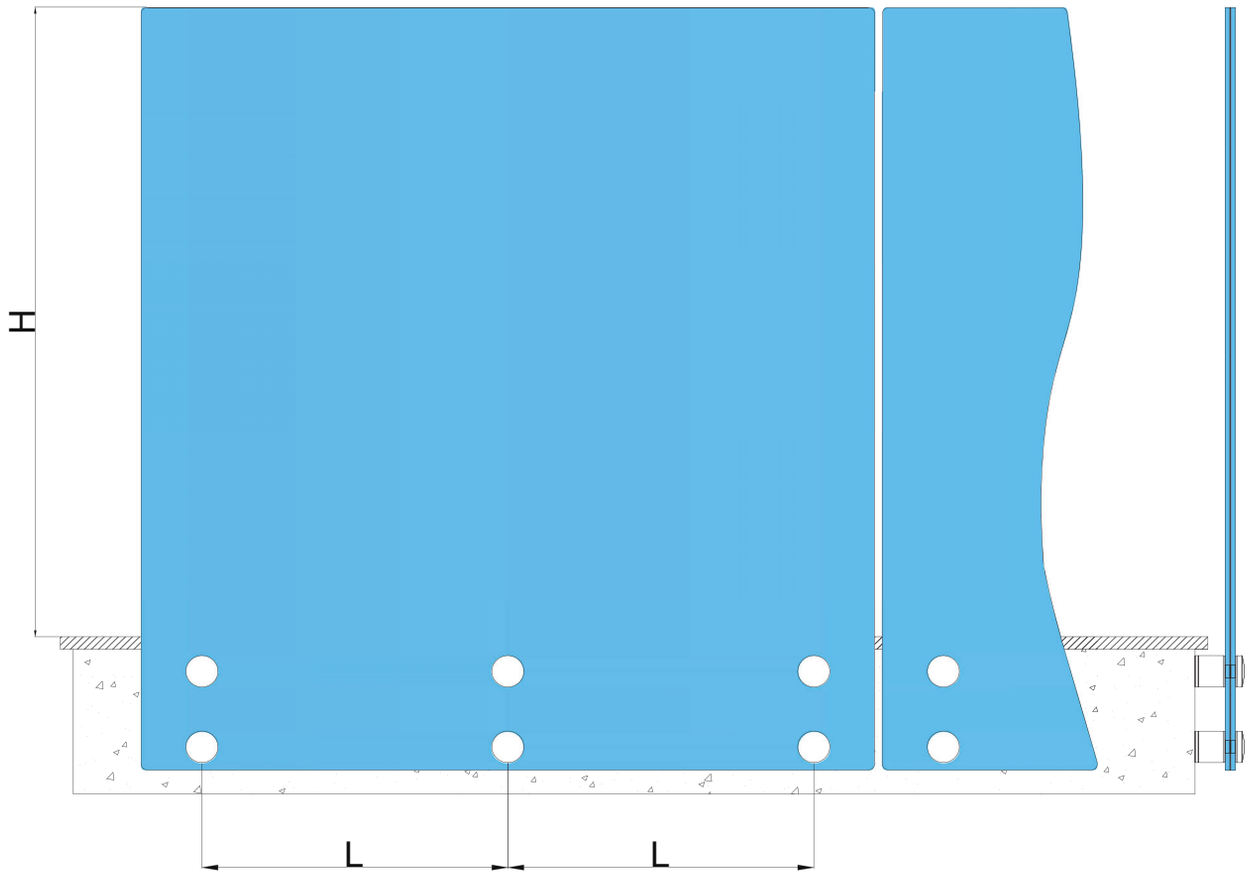

Cam Yüksekliği/H Glass Height/H Hauteur Verre/H Altura De Vidrio/H	Kalınlık (mm) Thickness (mm) Epaisseur (mm) Espesor (mm)	L	(kN)	(J)
0-599 mm	(5+1,52+5),(6+1,52+6)	1150 mm	-	-
	(8+1,52+8),(10+1,52+10)	1250 mm	-	-
600-899 mm	(5+1,52+5),(6+1,52+6)	1100 mm	-	-
	(8+1,52+8),(10+1,52+10)	1200 mm	-	-
900-1099 mm	(5+1,52+5),(6+1,52+6)	1000 mm	-	-
	(8+1,52+8),(10+1,52+10)	1100 mm	-	-
1100-1200 mm	(5+1,52+5),(6+1,52+6)	900 mm	-	-
	(8+1,52+8),(10+1,52+10)	1000 mm	-	-

*Bina yüksekliğine göre kullanılacak cam kalınlığı ve ürün aralığı değişkenlik gösterebilir.
*Depending on the building's height the measurements and standards may change
*Les épaisseurs de verre et les entraxe peuvent varier selon la hauteur du batiment.
*Dependiendo de la altura del edificio, las medidas y las estandares pueden cambiar

MC-200/C

Yandan Spider Bağlantısı 50 lik Gövde (Ayarlı) 45 mm Uzunluk (16-20 mm)

Lateral Spider Connection For Glass 50 mm Diameter (45 mm Length) (16-20 mm)

Point de Fixation Verre Ø 50 mm L = 45 mm (Verre 16-20 mm)

Connector Para Vidrio 50 mm Diámetro 45 mm Longitud (16-20 mm)

MC-200/D

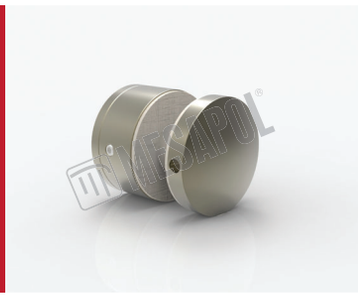

Yandan Spider Bağlantısı 50 lik Gövde (Ayarlı) 25 mm Uzunluk (16-20 mm)

Lateral Spider Connection For Glass 50 mm Diameter 25 mm Length (16-20 mm)

Point de Fixation Verre Ø 50 mm L = 25 mm (Verre 16-20 mm)

Connector Para Vidrio 50 mm Diámetro Ajustable (16-20 mm)

MC-200/B

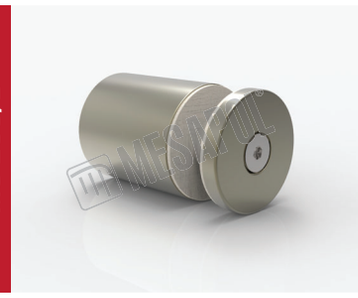

Yandan Spider Bağlantısı 50 lik Gövde (16-20 mm)

Lateral Spider Connection For Glass 50 mm Diameter (16-20 mm)

Point de Fixation Verre Ø 50 mm (16-20 mm)

Connector Para Vidrio 50 mm Diámetro (16-20 mm)

MC-200/A

Yandan Spider Bağlantısı 35 lik Gövde (8 - 12 mm)

Lateral Spider Connector 35 mm Diameter (8-12 mm)

Point de Fixation Verre Ø 35 mm (8 - 12 mm)

Connector Para Vidrio 35 mm Diámetro (8-12 mm)

MC-200/G

Yandan Spider Bağlantısı 50 lik Gövde (Ayarlı) (16-20 mm)

Lateral Spider Connection For Glass 50 mm Diameter (16-20 mm)

Point de Fixation Verre Ø 50 mm Double Réglage (Verre 16-20 mm)

Connector Para Vidrio 50 mm Diámetro Ajustable (16-20 mm)

MK-615

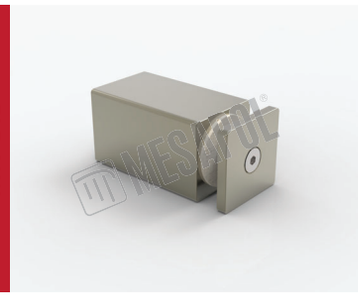

Kare Yandan Cam Bağlantı Aparatı (8 - 12 mm)

Lateral Square Glass Connector (8 - 12 mm)

Point de Fixaiton Verre Carré (8 - 12 mm)

Connector Para Vidrio Cuadrado (8 - 12 mm)

M27-49/A

M12 Tijli Çubuk 15 cm

M12 Rod 15 cm

M12 Tige Fileté 15 cm

M12 Barra 15 cm

M27-52/B

M12 Flanşlı Somun

M12 Nut With Washer

Ecrou Avec Rondelle M12

M12 Tuerca Con Arandela

M27-48/A

M10 Tijli Çubuk 15 cm

M10 Rod 15 cm

M10 Tige Fileté 15 cm

M10 Barra 15 cm

M27-52

M10 Pul

M10 Washer

Rondelle M10

M10 Arandela

M27-52/A

M10 Flanşlı Somun

M10 Nut With Washer

Ecrou Avec Rondelle M10

M10 Tuerca Con Arandela

M27-57

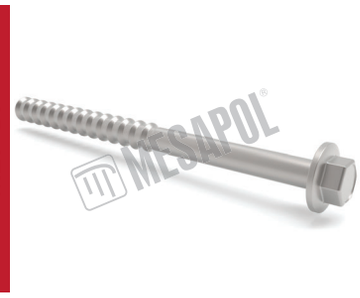

M10*150 Beton Vidası - Multi Monti

M10*150 Concrete Screw - Multi Monti

Vis Béton M10×150

M10*150 Tornillo Para Hormigón - Multi Monti

GS-03

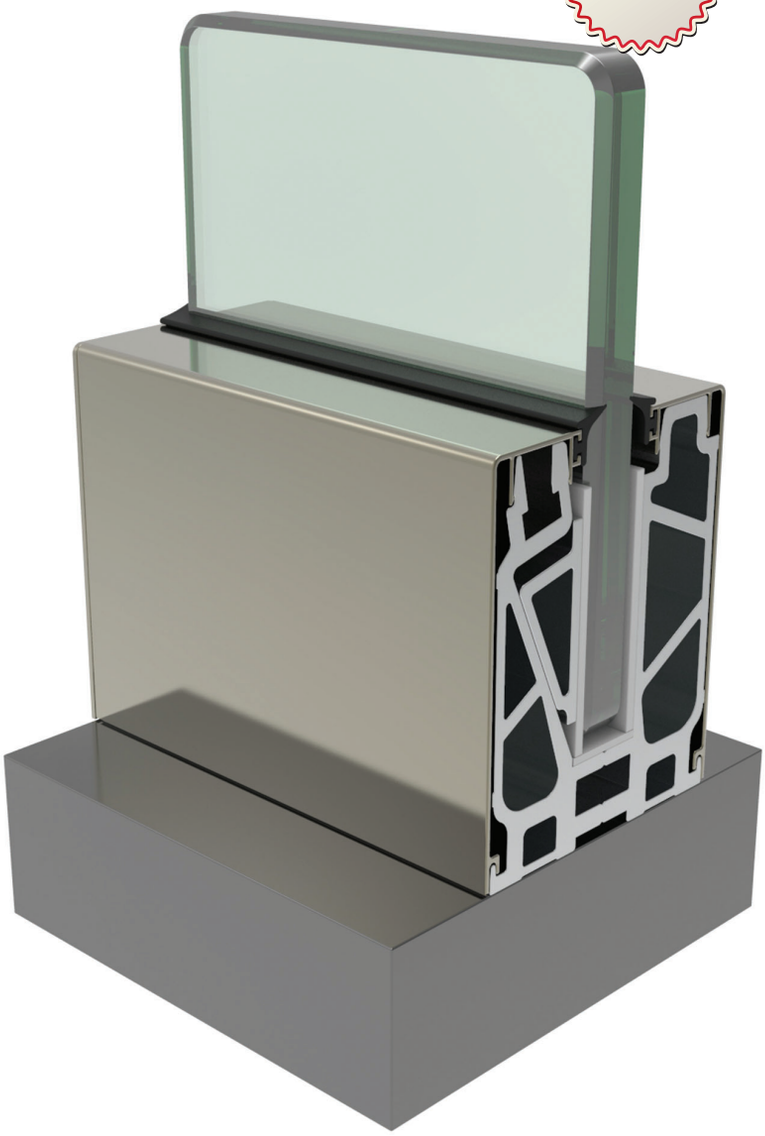
Tested

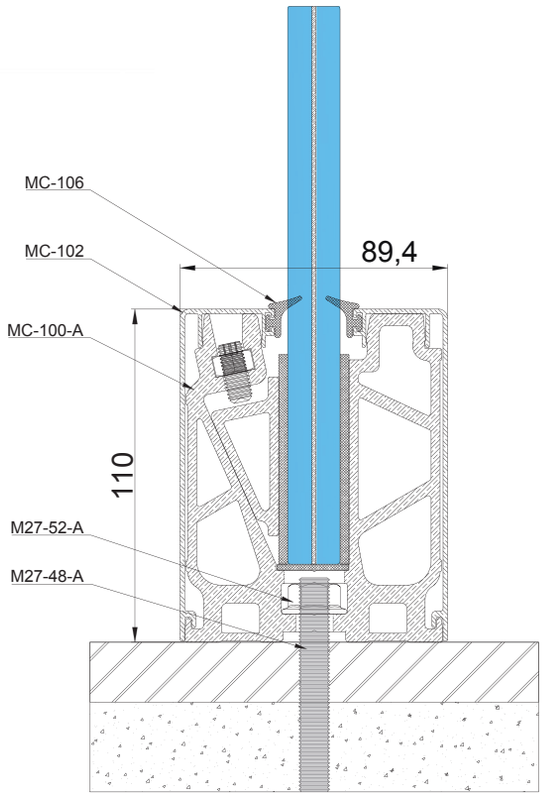
MC-106
MC-102
MC-100-A
M27-52-A
M27-48-A
89,4
110

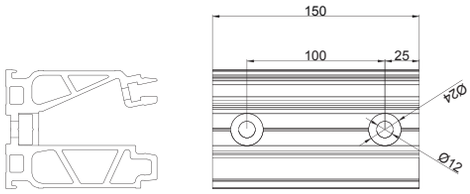
150
100
25
Ø24
Ø12

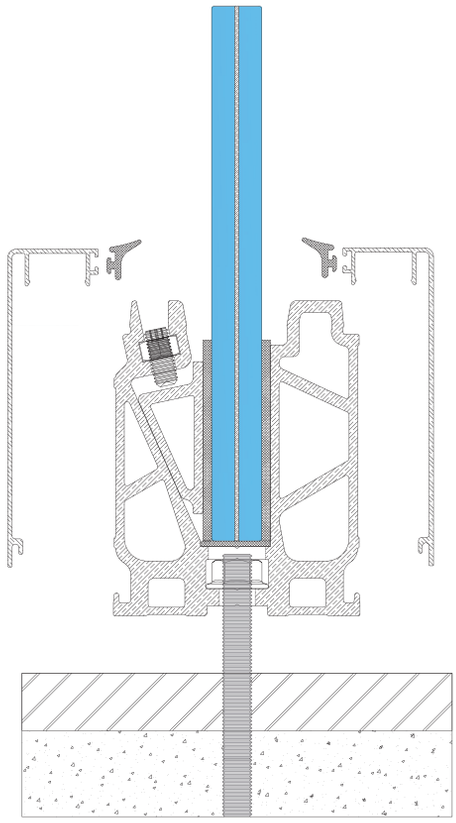

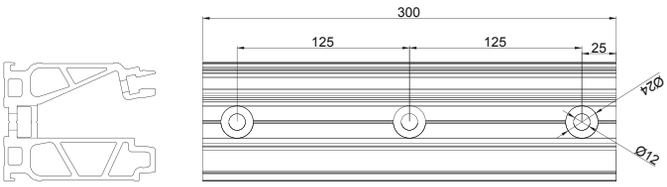
300
125
125
25
Ø24
Ø12

GS-03

Tested

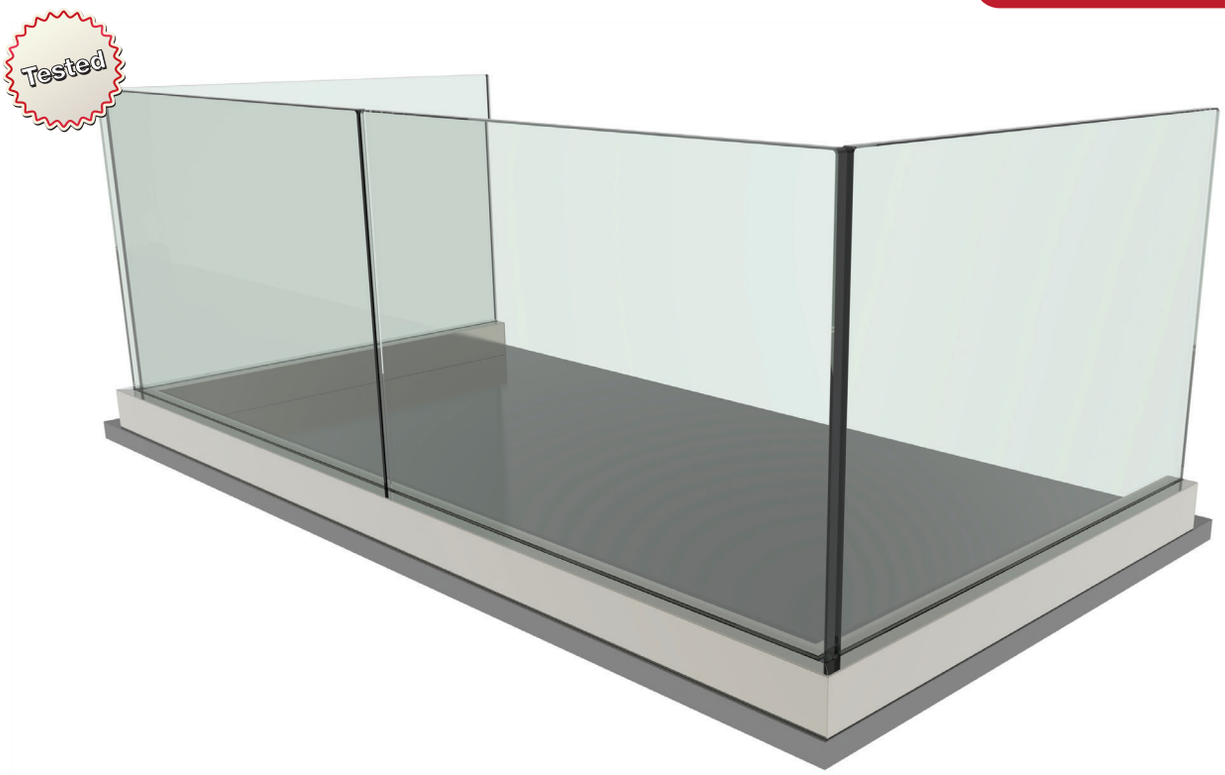

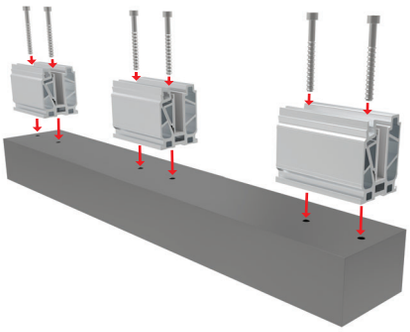

1

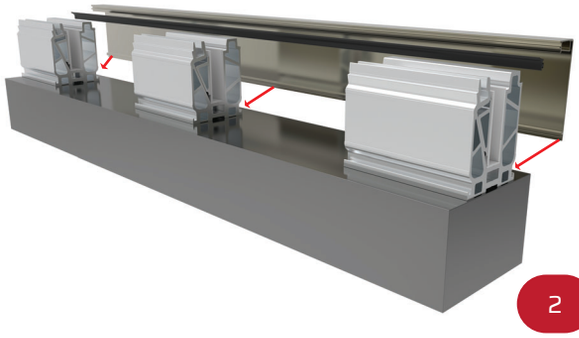

2

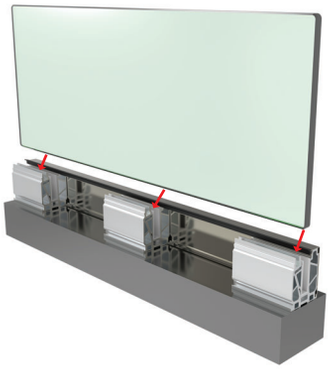

3

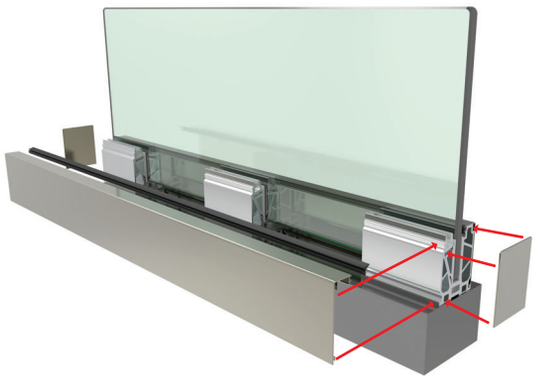

4

5

GS-03

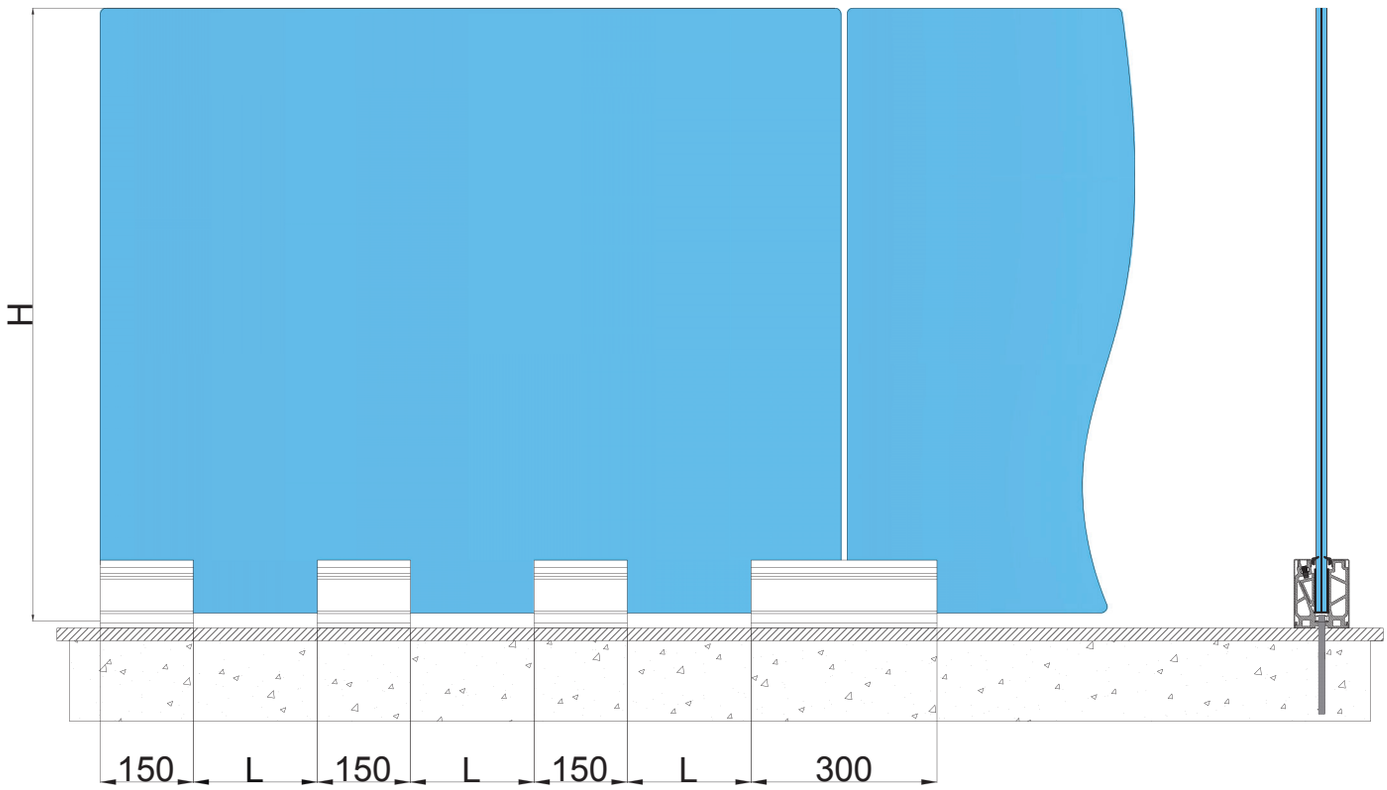

Cam Yüksekliği/H Glass Height/H Hauteur Verre/H Altura De Vidrio/H	Kalınlık (mm) Thickness (mm) Epaisseur (mm) Espesor (mm)	L	(kN)	(J)
0-599 mm	(5+1,52+5),(6+1,52+6)	350 mm	-	-
	(8+1,52+8),(10+1,52+10)	400 mm	-	-
600-899 mm	(5+1,52+5),(6+1,52+6)	300 mm	-	-
	(8+1,52+8),(10+1,52+10)	350 mm	-	-
900-1099 mm	(5+1,52+5),(6+1,52+6)	250 mm	-	-
	(8+1,52+8),(10+1,52+10)	300 mm	-	-
1100-1200 mm	(5+1,52+5),(6+1,52+6)	200 mm	-	-
	(8+1,52+8),(10+1,52+10)	266 mm	3,1	600

*Bina yüksekliğine göre kullanılacak cam kalınlığı ve ürün aralığı değişkenlik gösterebilir.
*Depending on the building's height the measurements and standards may change
*Les épaisseurs de verre et les entraxe peuvent varier selon la hauteur du batiment
*Dependiendo de la altura del edificio, las medidas y las estandares pueden cambiar

MC-100/A

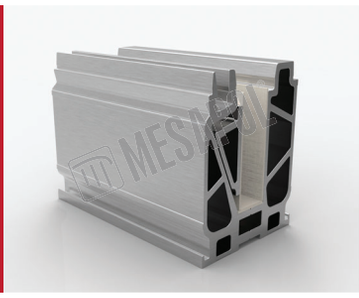

Cam Yatağı Takımı 15 cm Zemin
Base Profile Set 15 cm
Profil de Sol 15 cm (Sur Dalle ou Encastrer)
Base Perfil 15 cm (Con Cuña Y Plástica Para Apretar el Vidrio)

MC-101/A

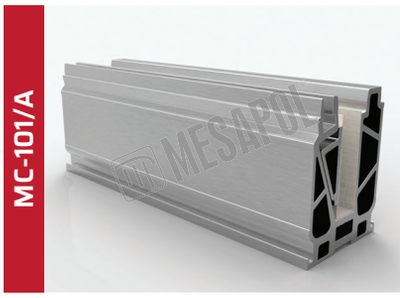

Cam Yatağı Takımı 30 cm Zemin
Base Profile Set 30 cm
Profil de Sol 30 cm (Sur Dalle ou Encastrer)
Base Perfil 30 cm (Con Cuña Y Plástica Para Apretar el Vidrio)

MC-102

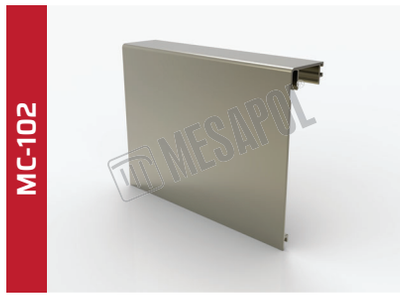

Cam Yatağı Kapağı (4,30 kg / 6 mt)
Base Profile Cover (4,30 kg / 6 mt)
Enjoliveur Profil de Sol (4,30 kg / 6 mt)
Perfil Para Tapa Letaral (4,30 kg / 6 mt)

MC-105

20 mm Cam İçin Kapak Fitili (1 mt)
20 mm Glass Gasket For Profile Cover (1 mt)
20 mm Joint D'enjoliveur Pour Verre (1 mt)
20 mm Goma Para Tapa Perfil Letaral (1 mt)

MC-106

10-12-16 mm Cam İçin Kapak Fitili (1 mt)
10-12-16 mm Glass Gasket For Profile Cover (1 mt)
10-12-16 mm Joint D'enjoliveur Pour Verre (1 mt)
10-12-16 mm Goma Para İnterior de Tapa Lateral (1 mt)

MC-109

Cam Yatağı Tapası
Plug For Base Profile
Embout de Finiton Pour Profil de Sol
Tapa Final

M27-48/A

M10 Tijli Çubuk 15 cm
M10 Rod 15 cm
M10 Tige Fileté 15 cm
M10 Barra 15 cm

M27-52

M10 Pul
M10 Washer
Rondelle M10
M10 Arandela

M27-52/A

M10 Flanşlı Somun
M10 Nut And Washer
Ecrou Avec Rondelle M10
M10 Tuerca Con Arandela

M27-57

M10*150 Beton Vidası - Multi Monti
M10*150 Concrete Screw - Multi Monti
Vis Béton M10×150
M10*150 Tornillo Para Hormigón - Multi Monti

GS-03/G

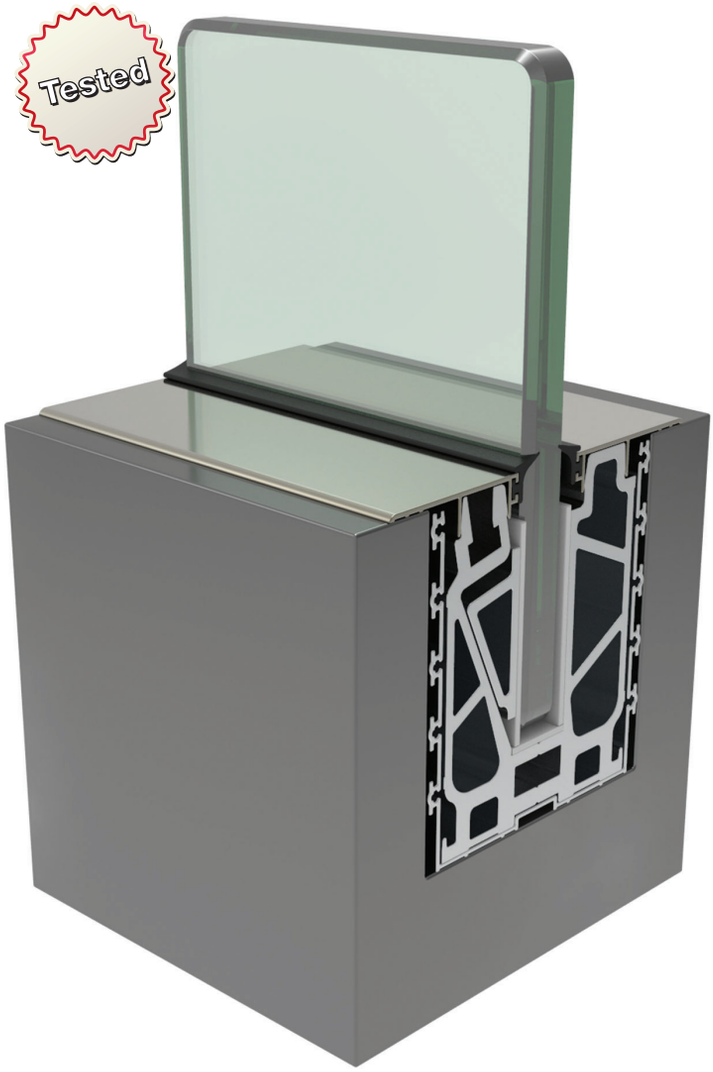
Tested

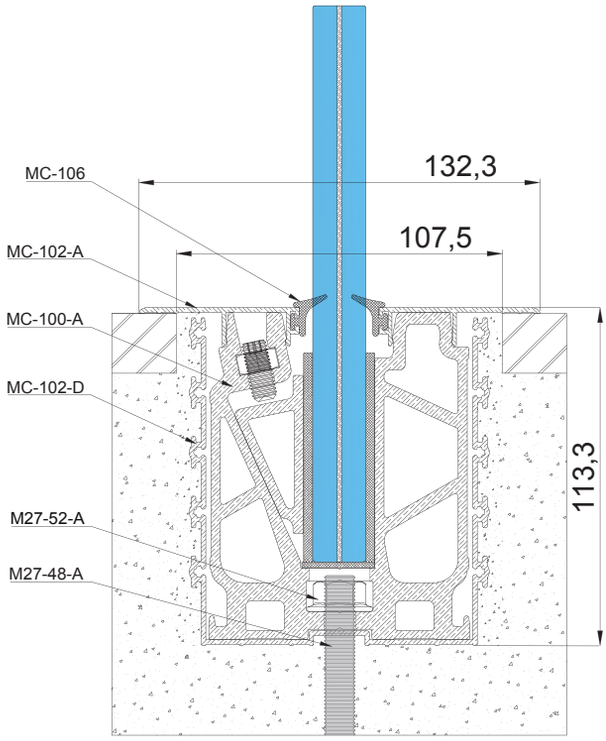
MC-106
MC-102-A
MC-100-A
MC-102-D
M27-52-A
M27-48-A
132,3
107,5
113,3

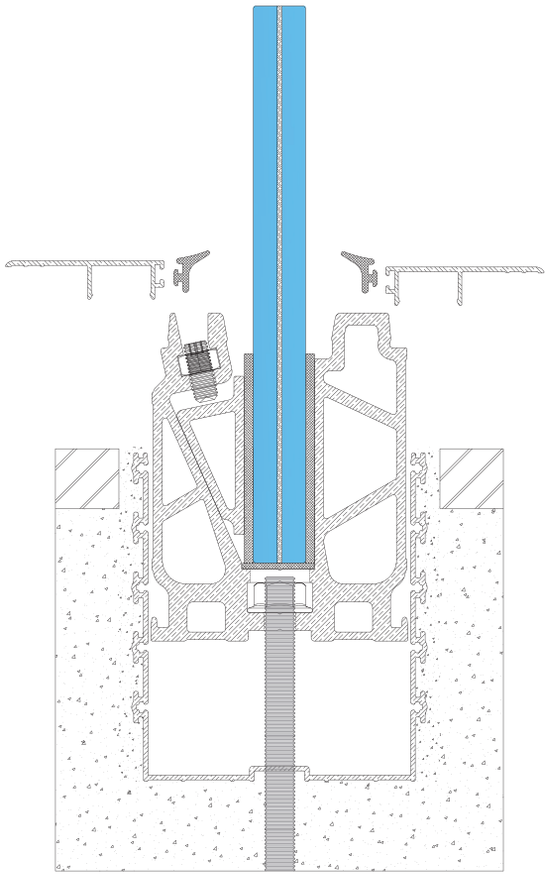

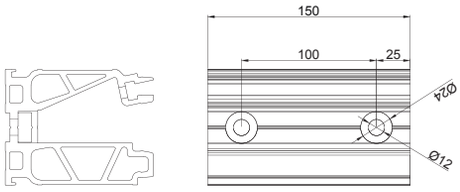
150
100
25
Ø24
Ø12

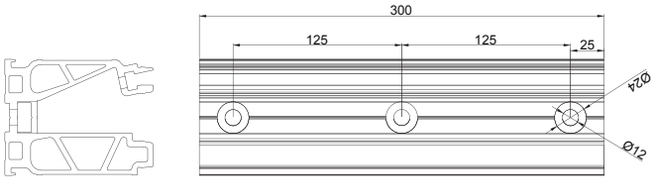
300
125
125
25
Ø24
Ø12

GS-03/G

Tested

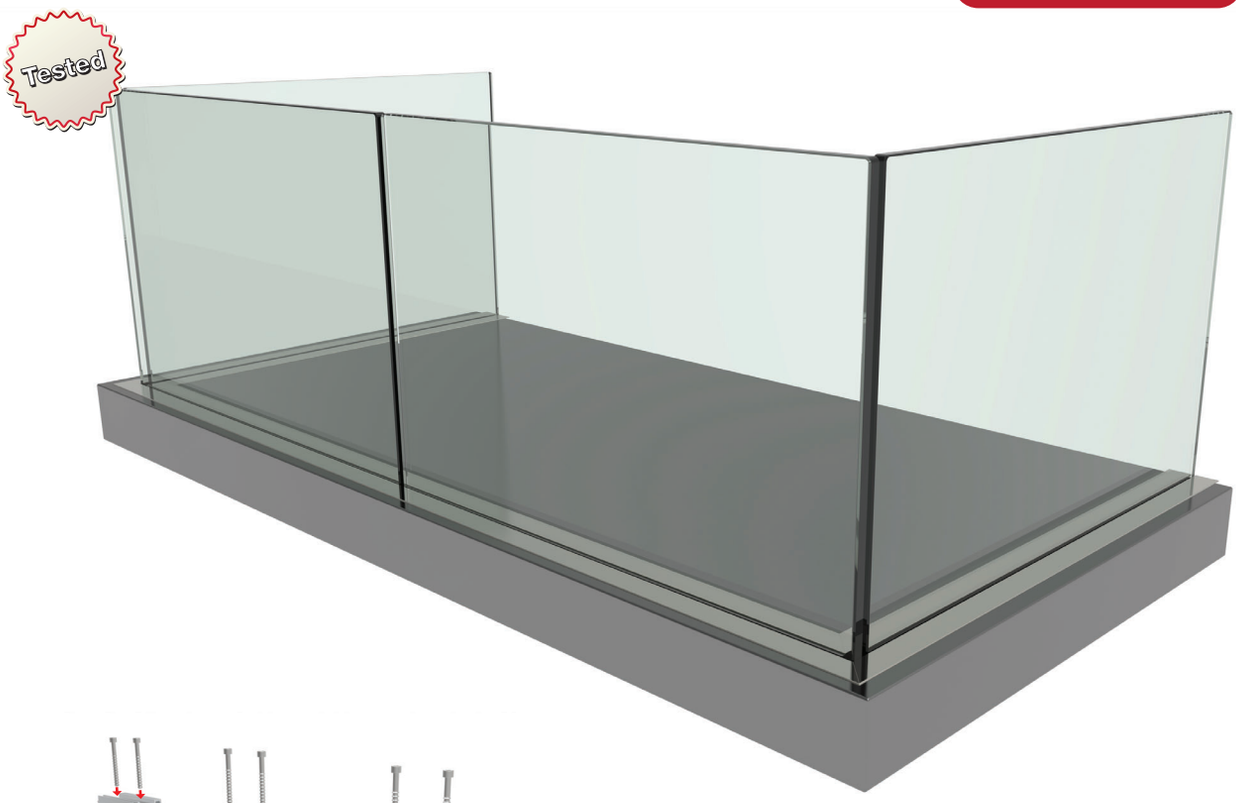

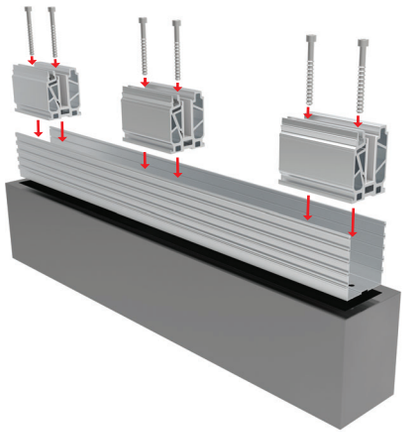

1

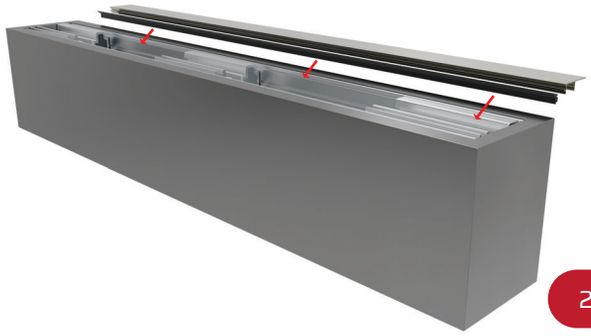

2

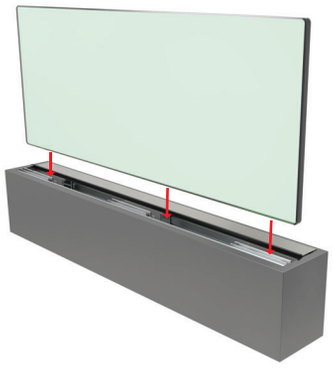

3

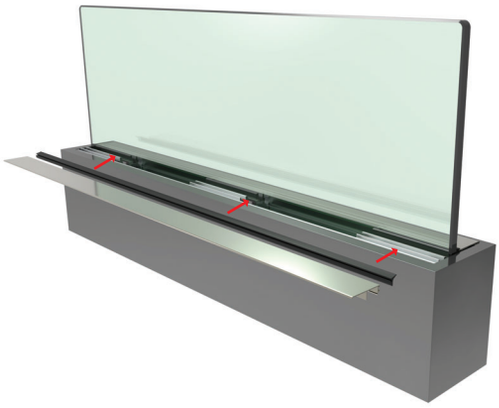

4

5

GS-03/G

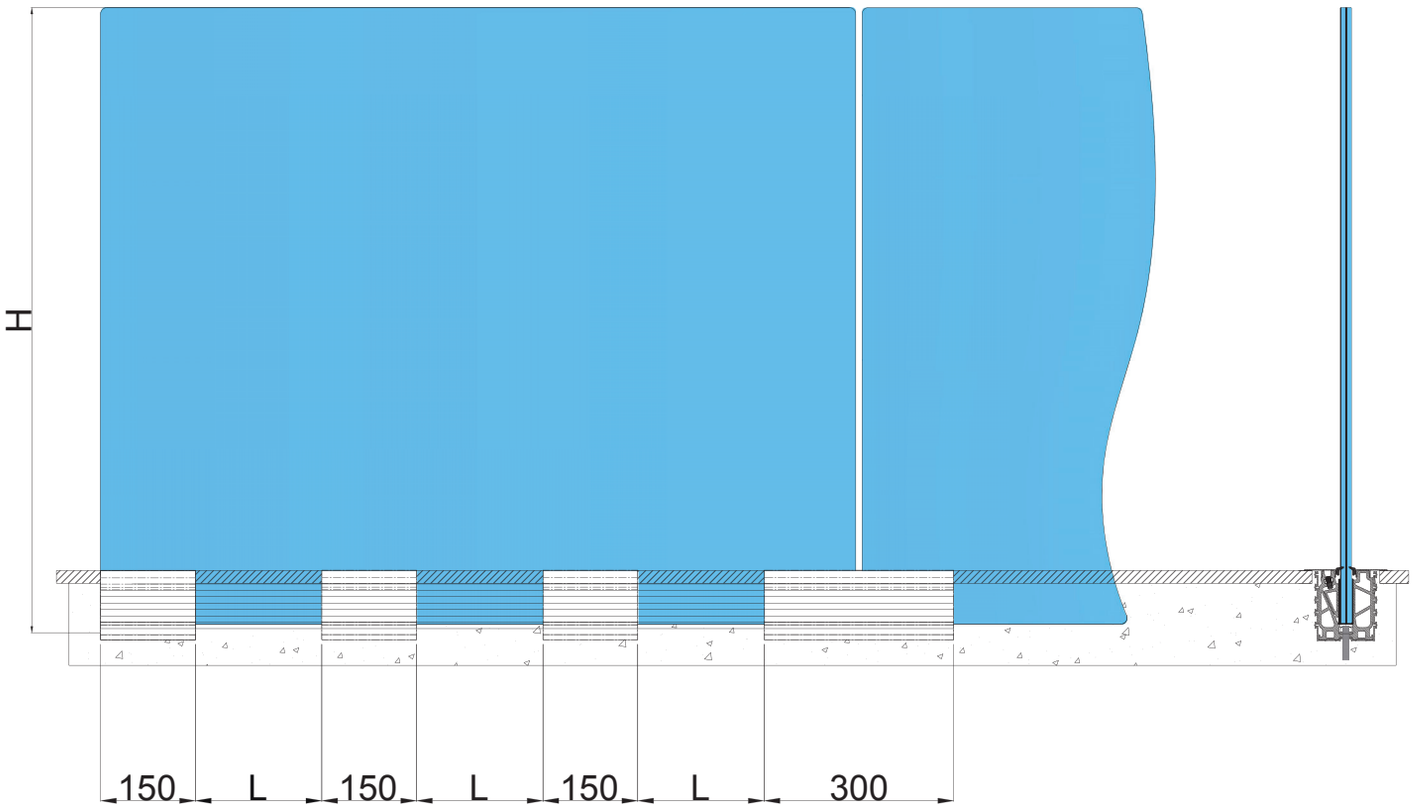

Cam Yüksekliği/H Glass Height/H Hauteur Verre/H Altura De Vidrio/H	Kalınlık (mm) Thickness (mm) Epaisseur (mm) Espesor (mm)	L	(kN)	(J)
0-599 mm	(5+1,52+5),(6+1,52+6)	350 mm	-	-
	(8+1,52+8),(10+1,52+10)	400 mm	-	-
600-899 mm	(5+1,52+5),(6+1,52+6)	300 mm	-	-
	(8+1,52+8),(10+1,52+10)	350 mm	-	-
900-1099 mm	(5+1,52+5),(6+1,52+6)	250 mm	-	-
	(8+1,52+8),(10+1,52+10)	300 mm	-	-
1100-1200 mm	(5+1,52+5),(6+1,52+6)	200 mm	-	-
	(8+1,52+8),(10+1,52+10)	266 mm	3,1	600

*Bina yüksekliğine göre kullanılacak cam kalınlığı ve ürün aralığı değişkenlik gösterebilir.
*Depending on the building's height the measurements and standards may change
*Les épaisseurs de verre et les entraxe peuvent varier selon la hauteur du batiment
*Dependiendo de la altura del edificio, las medidas y las estandares pueden cambiar

MC-100/A

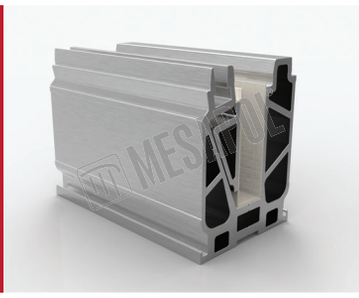

Cam Yatağı Takımı 15 cm Zemin
Base Profile Set 15 cm
Profil de Sol 15 cm (Sur dalle ou encastrer)
Base Perfil 15 cm (Con Cuña Y Plástica Para Apretar el Vidrio)

MC-101/A

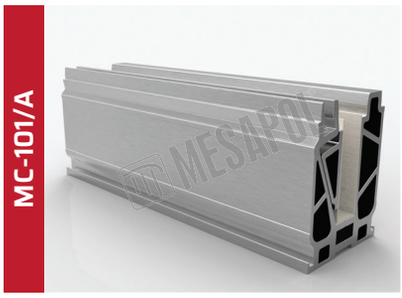

Cam Yatağı Takımı 30 cm Zemin
Base Profile Set 30 cm
Profil de sol 30 cm (Sur dalle ou encastrer)
Base Perfil 30 cm (Con Cuña Y Plástica Para Apretar el Vidrio)

MC-102/A

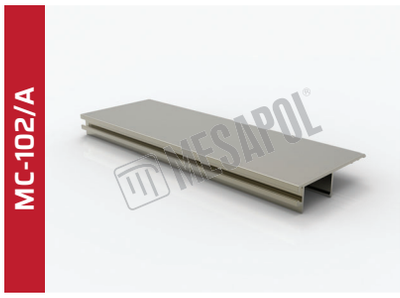

Cam Yatağı Kapağı Gömme (2 kg / 6 mt)
Base Profile Top Cover (2 kg / 6 mt)
Enjoliveur Profil de Sol Encastrer (2 kg / 6 mt)
Perfil Para Tapa Superior (2 kg / 6 mt)

MC-102/D

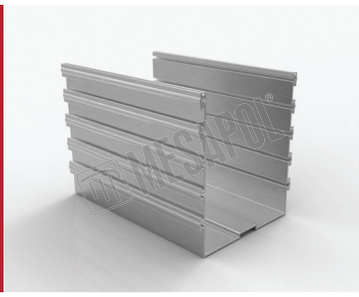

Zemin Altı Profili (11 kg / 6 mt)
U Profile For Base Profile Set (11 kg / 6 mt)
Support Profil de Sol Encaster (11 kg / 6 mt)
Perfil U Para Perfil Bases (11 kg / 6 mt)

MC-105

20 Mm Cam İçin Kapak Fitili (1 mt)
20 Mm Glass Gasket For Profile Cover (1 mt)
20 mm Joint D'enjoliveur Pour Verre (1 mt)
20 mm Goma Para Tapa Perfil Letaral (1 mt)

MC-106

10-12-16 Mm Cam İçin Kapak Fitili (1 mt)
10-12-16 Mm Glass Gasket For Profile Cover (1 mt)
10-12-16 mm Joint D'enjoliveur Pour Verre (1 mt)
10-12-16 mm Goma Para İnterior de Tapa Lateral (1 mt)

M27-48/A

M10 Tijli Çubuk 15 cm
M10 Rod 15 cm
M10 Tige Fileté 15 cm
M10 Barra 15 cm

M27-52

M10 Pul
M10 Washer
Rondelle M10
M10 Arandela

M27-52/A

M10 Flanşlı Somun
M10 Nut And Washer
Ecrou Avec Rondelle M10
M10 Tuerca Con Arandela

M27-57

M10*150 Beton Vıdası - Multi Monti
M10*150 Concrete Screw - Multi Monti
Vis Béton M10×150
M10*150 Tornillo Para Hormigón - Multi Monti

GS-03/L

Tested

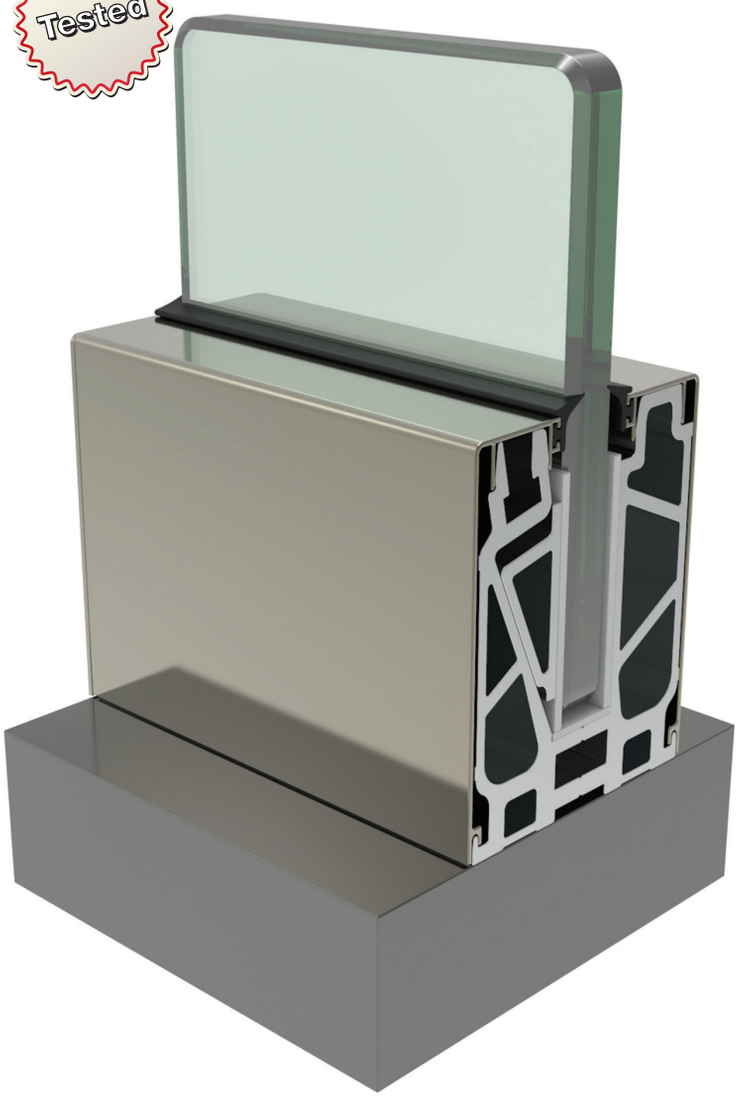

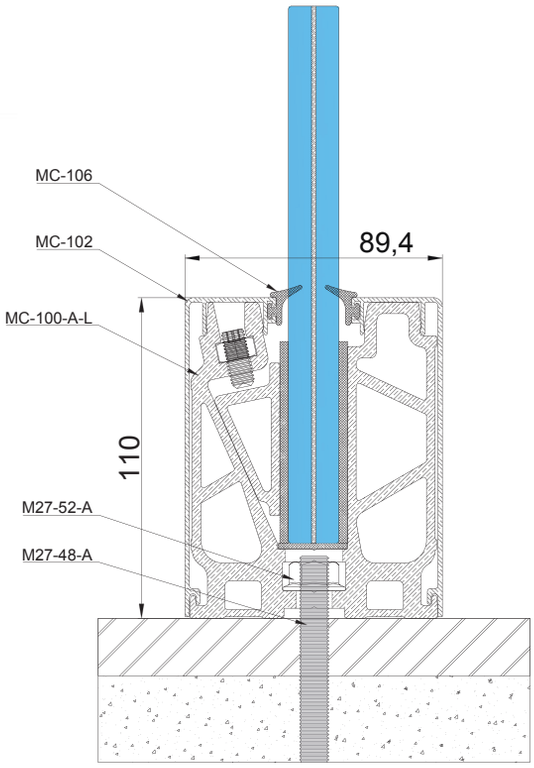

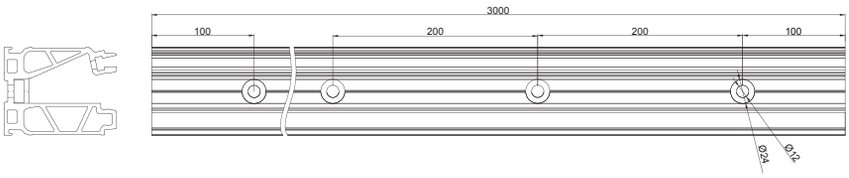

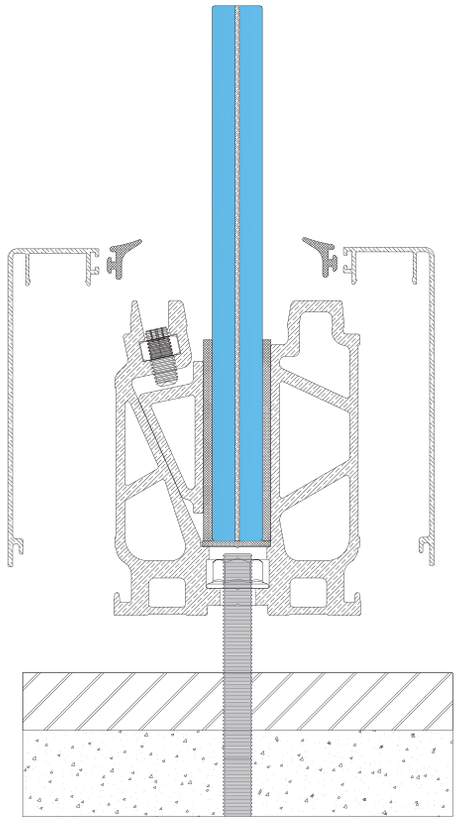

GS-03/L

Tested

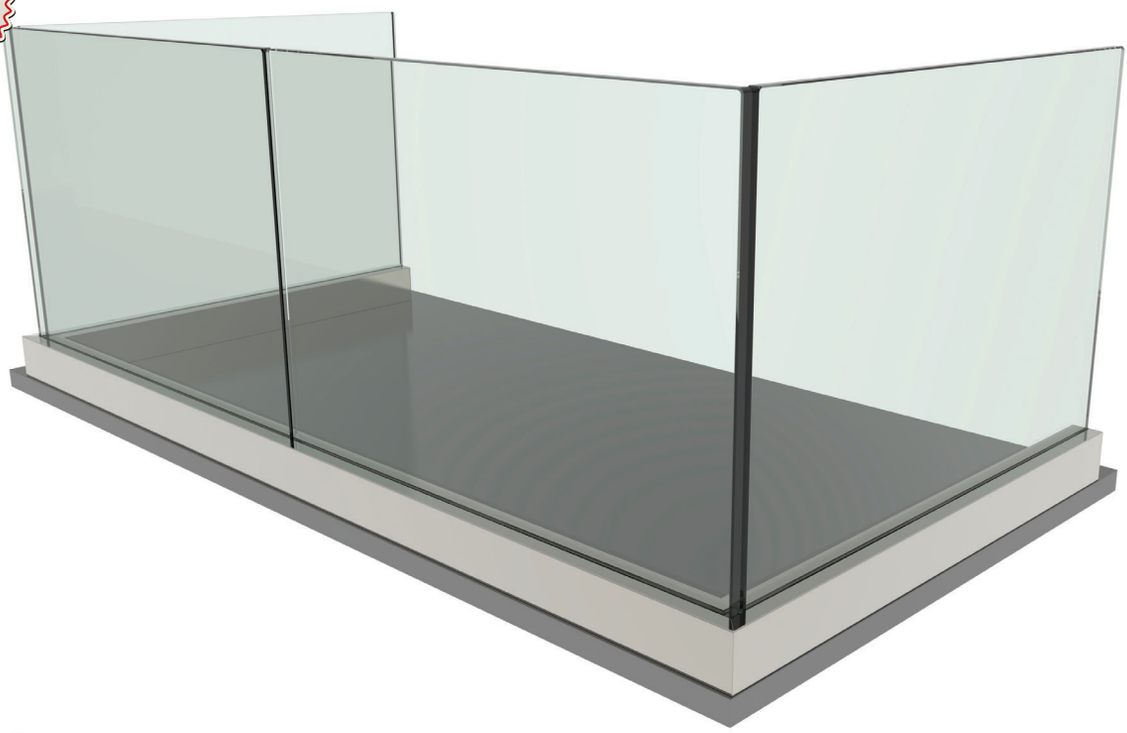

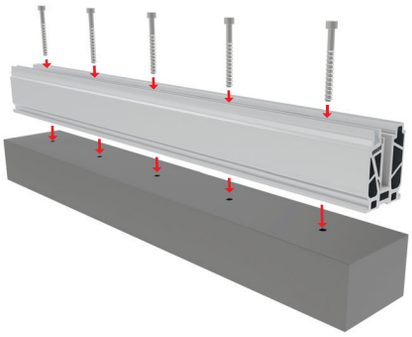

1

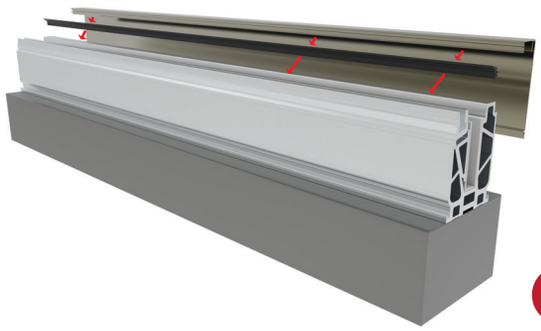

2

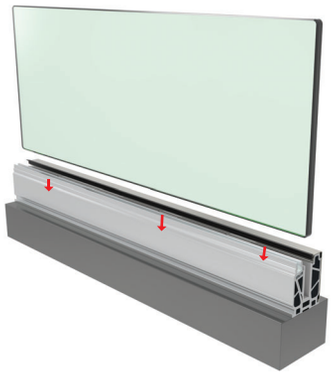

3

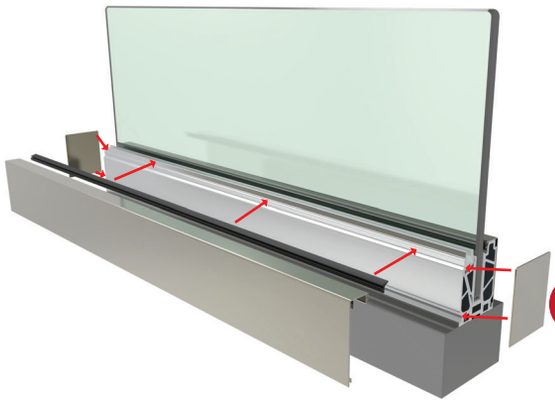

4

5

GS-03/L

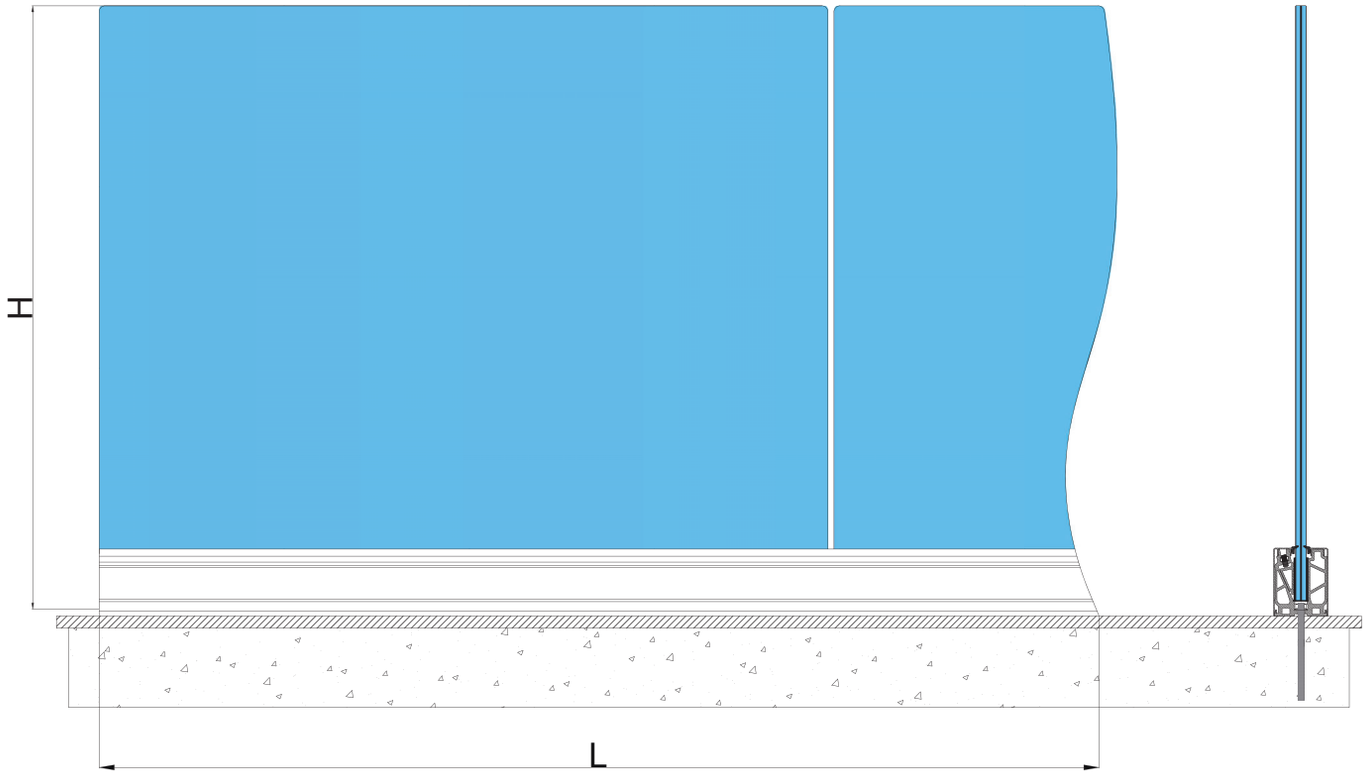

Cam Yüksekliği/H Glass Height/H Hauteur Verre/H Altura De Vidrio/H	Kalınlık (mm) Thickness (mm) Epaisseur (mm) Espesor (mm)	L	(kN)	(J)
0-1200 mm	(5+1,52+5),(6+1,52+6)	3000 mm	-	-
	(8+1,52+8)		6,9	600
	(10+1,52+10)		7,7	600

MC-100/A/L

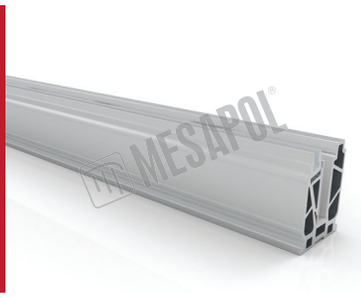

Cam Yatağı Takımı 300 cm
Base Profile Set 300 cm
Profil de Sol 300 cm (Sur dalle)
Base Perfil 300 cm (Con Cuña Y Plástica Para Apretar el Vidrio)

MC-102

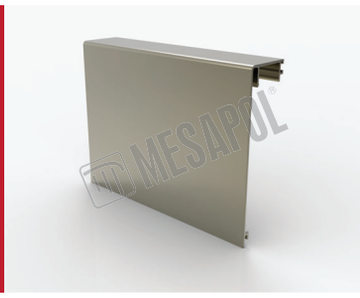

Cam Yatağı Kapağı (4,30 kg / 6 mt)
Base Profile Cover (4,30 kg / 6 mt)
Enjoliveur Profil De Sol (4,30 kg / 6 mt)
Perfil Para Tapa Letaral (4,30 kg / 6 mt)

MC-105

20 mm Cam İçin Kapak Fitili (1 mt)
20 mm Glass Gasket For Profile Cover (1 mt)
20 mm Joint D'enjoliveur Pour Verre (1 mt)
20 mm Goma Para Tapa Perfil Letaral (1 mt)

MC-106

10-12-16 mm Cam İçin Kapak Fitili (1 mt)
10-12-16 mm Glass Gasket For Profile Cover (1 mt)
10-12-16 mm Joint D'enjoliveur Pour Verre (1 mt)
10-12-16 mm Goma Para İnterior de Tapa Lateral (1 mt)

MC-109

Cam Yatağı Tapası
Plug For Base Profile
Embout De Finiton Pour Profil De Sol
Tapa Final

M27-48/A

M10 Tijli Çubuk 15 cm
M10 Rod 15 cm
M10 Tige Fileté 15 cm
M10 Barra 15 cm

M27-52

M10 Pul
M10 Washer
Rondelle M10
M10 Arandela

M27-52/A

M10 Flanşlı Somun
M10 Nut And Washer
Ecrou Avec Rondelle M10
M10 Tuerca Con Arandela

M27-57

M10*150 Beton Vıdası - Multi Monti
M10*150 Concrete Screw - Multi Monti
Vis Béton M10×150
M10*150 Tornillo Para Hormigón - Multi Monti

GS-04

Tested

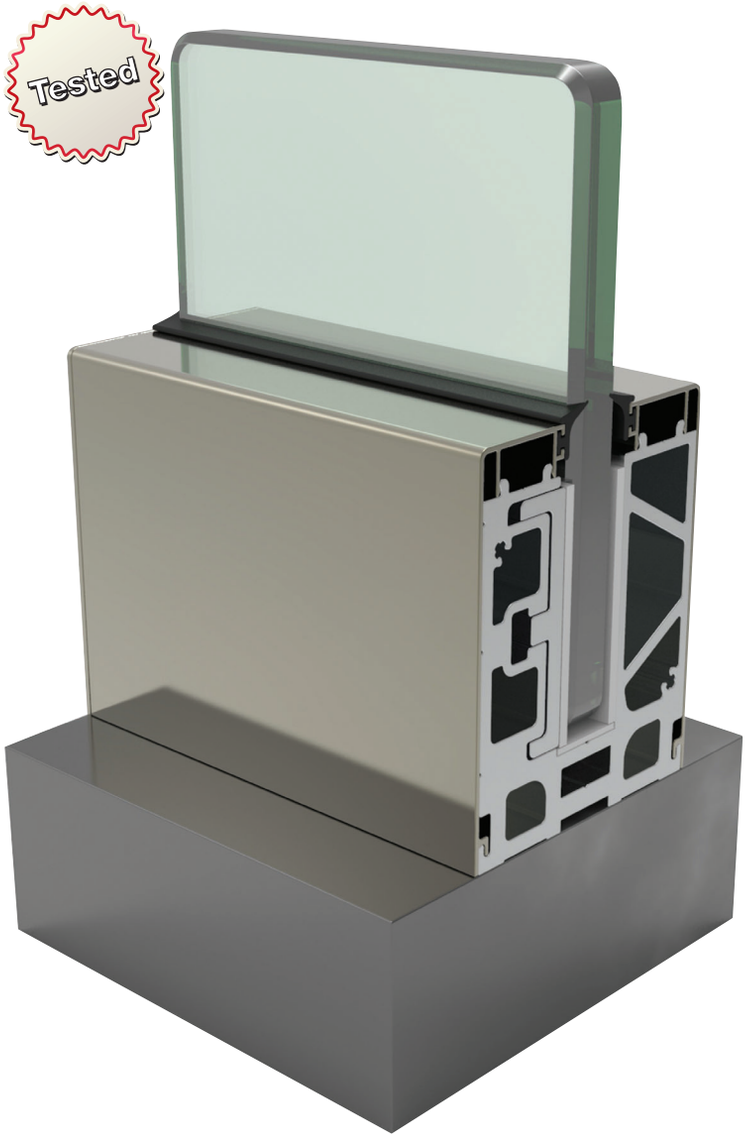

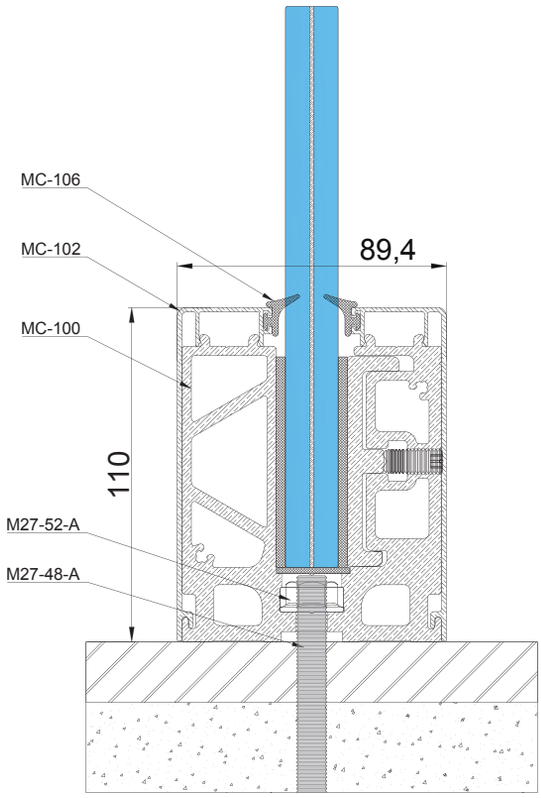
MC-106
MC-102
MC-100
M27-52-A
M27-48-A
89,4
110

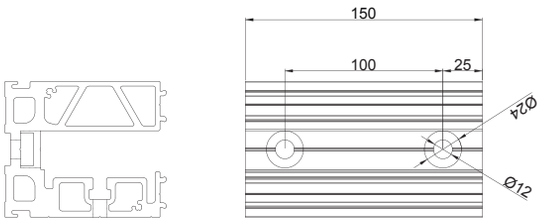
150
100
25
Ø24
Ø12

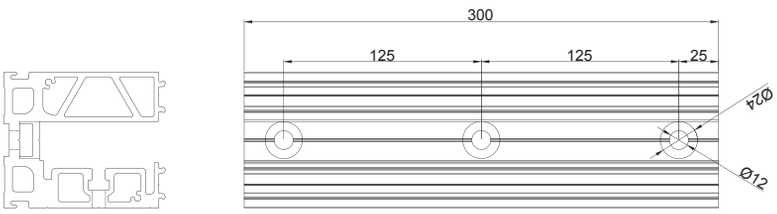
300
125
125
25
Ø24
Ø12

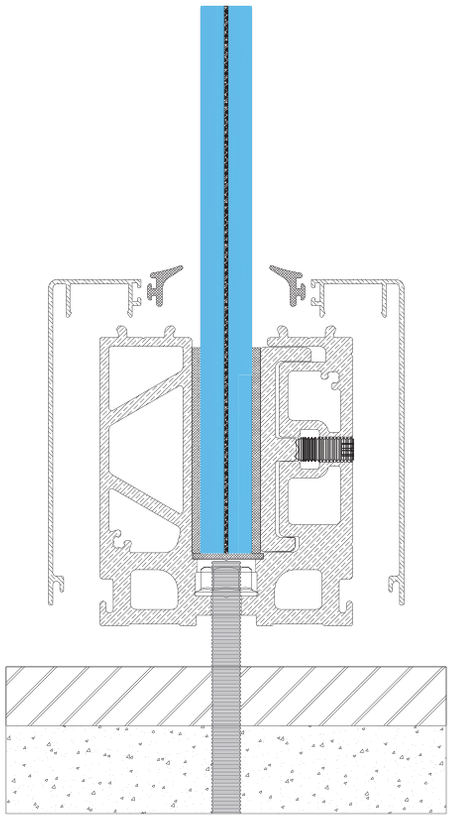

GS-04

Tested

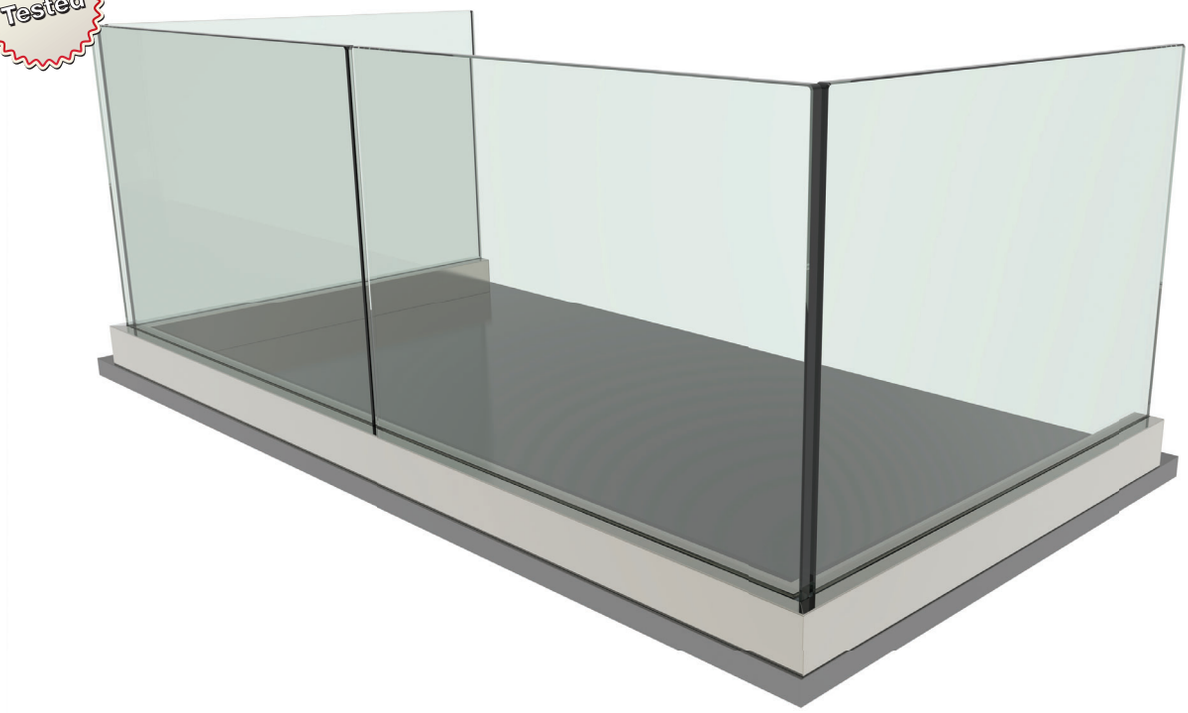

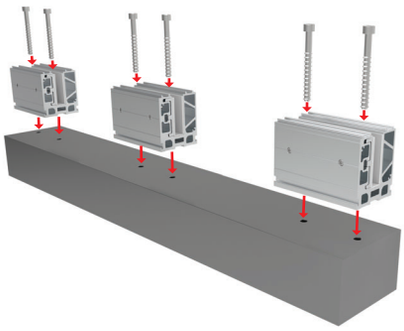

1

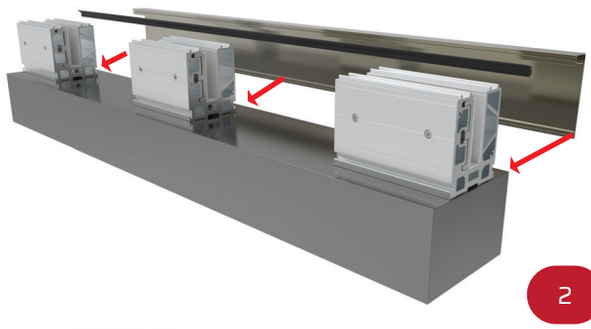

2

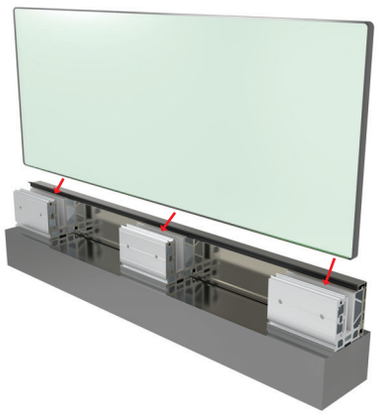

3

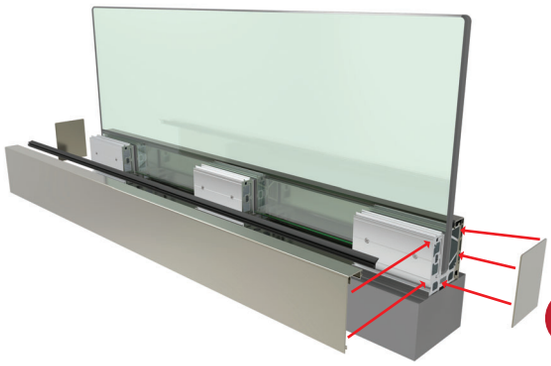

4

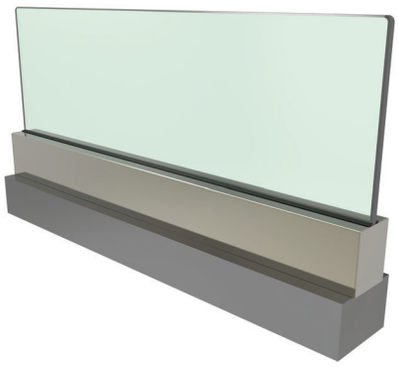

5

GS-04

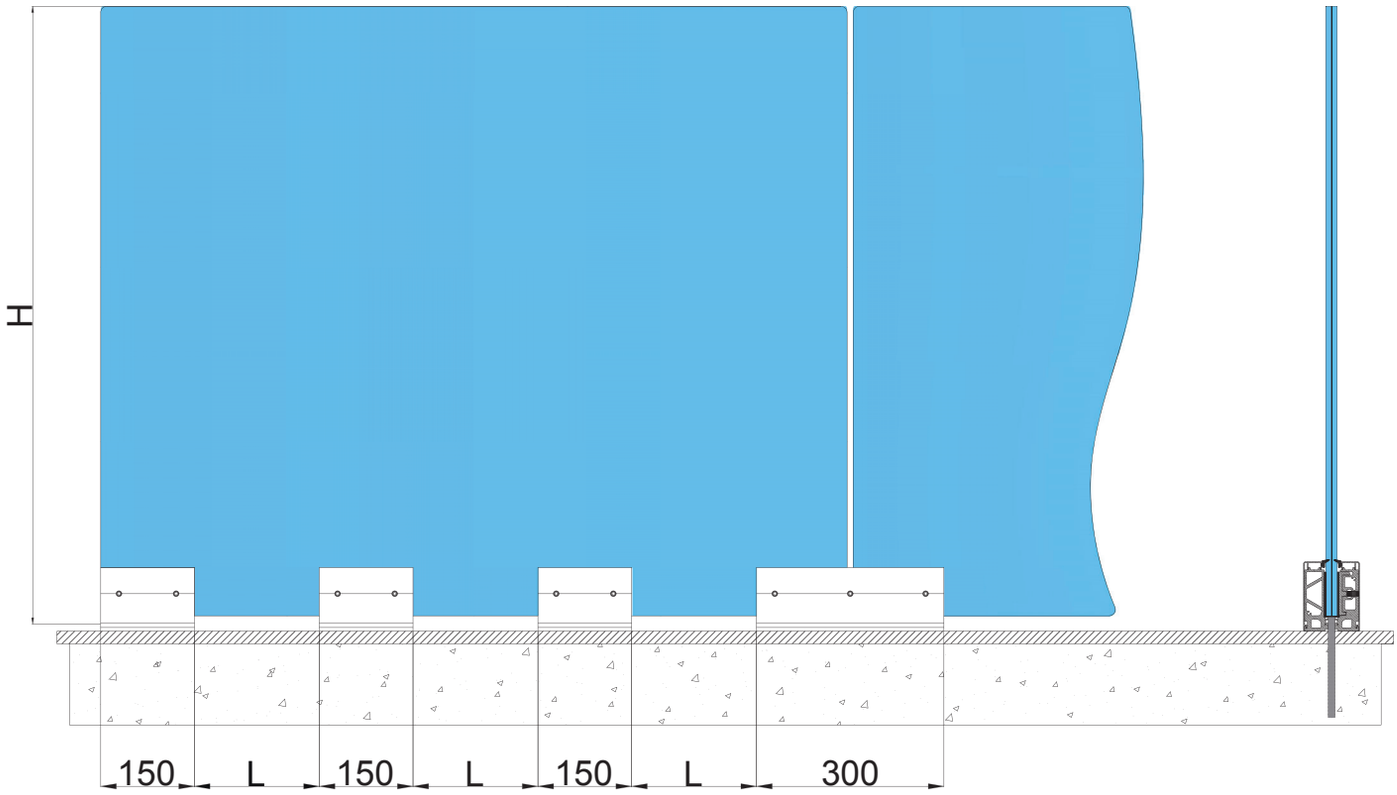

Cam Yüksekliği/H Glass Height/H Hauteur Verre/H Altura De Vidrio/H	Kalınlık (mm) Thickness (mm) Epaisseur (mm) Espesor (mm)	L	(kN)	(J)
0-599 mm	(5+1,52+5),(6+1,52+6)	350 mm	-	-
	(8+1,52+8),(10+1,52+10)	400 mm	-	-
600-899 mm	(5+1,52+5),(6+1,52+6)	300 mm	-	-
	(8+1,52+8),(10+1,52+10)	350 mm	-	-
900-1099 mm	(5+1,52+5),(6+1,52+6)	250 mm	-	-
	(8+1,52+8),(10+1,52+10)	300 mm	-	-
1100-1200 mm	(5+1,52+5),(6+1,52+6)	200 mm	-	-
	(8+1,52+8),(10+1,52+10)	266 mm	3,3	600

*Bina yüksekliğine göre kullanılacak cam kalınlığı ve ürün aralığı değişkenlik gösterebilir.
*Depending on the building's height the measurements and standards may change
*Les épaisseurs de verre et les entraxe peuvent varier selon la hauteur du batiment.
*Dependiendo de la altura del edificio, las medidas y las estandares pueden cambiar

MC-100

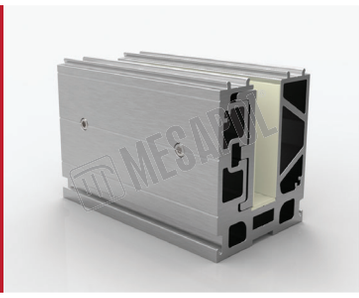

Cam Yatağı Takımı 15 cm
Base Profile Set 15 cm
Profil de Sol 15 cm (Sur Dalle)
Base Perfil 15 cm (Con Cuña Y Plástica Para Apretar el Vidrio)

MC-101

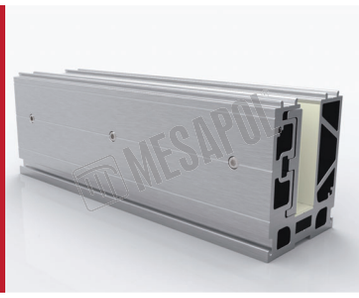

Cam Yatağı Takımı 30 cm
Base Profile Set 30 cm
Profil De Sol 30 cm (Sur Dalle)
Base Perfil 30 cm (Con Cuña Y Plástica Para Apretar el Vidrio)

MC-102

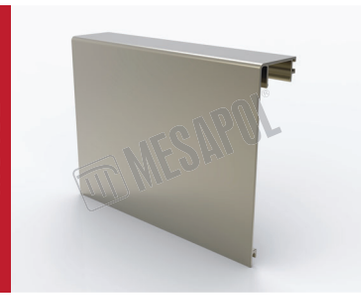

Cam Yatağı Kapağı (4,30 kg / 6 mt)
Cover For Base Profile (4,30 kg / 6 mt)
Enjoliveur Profil De Sol (4,30 kg / 6 mt)
Perfil Para Tapa Letaral (4,30 kg / 6 mt)

MC-105

20 Mm Cam Için Kapak Fitili (1 mt)
20 Mm Glass Gasket For Profile Cover (1 mt)
20 mm Joint D'enjoliveur Pour Verre (1 mt)
20 mm Goma Para Tapa Perfil Letaral (1 mt)

MC-106

10-12-16 mm Cam Için Kapak Fitili (1 mt)
10-12-16 mm Glass Gasket For Profile Cover (1 mt)
10-12-16 mm Joint D'enjoliveur Pour Verre (1 mt)
10-12-16 mm Goma Para İnterior de Tapa Lateral (1 mt)

MC-109

Cam Yatağı Tapası
Plug For Base Profile
Embout De Finiton Pour Profil De Sol
Tapa Final

M27-48/A

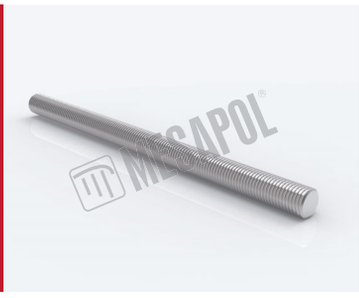

M10 Tijli Çubuk 15 cm
M10 Rod 15 cm
M10 Tige Fileté 15 cm
M10 Barra 15 cm

M27-52

M10 Pul
M10 Washer
Rondelle M10
M10 Arandela

M27-52/A

M10 Flanşlı Somun
M10 Nut And Washer
Ecrou Avec Rondelle M10
M10 Tuerca Con Arandela

M27-57

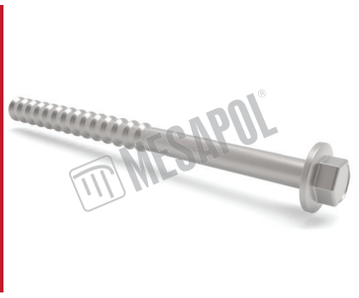

M10*150 Beton Vidası - Multi Monti
M10*150 Concreate Screw - Multi Monti
Vis Béton M10×150
M10*150 Tornillo Para Hormigón - Multi Monti

GS-04/L

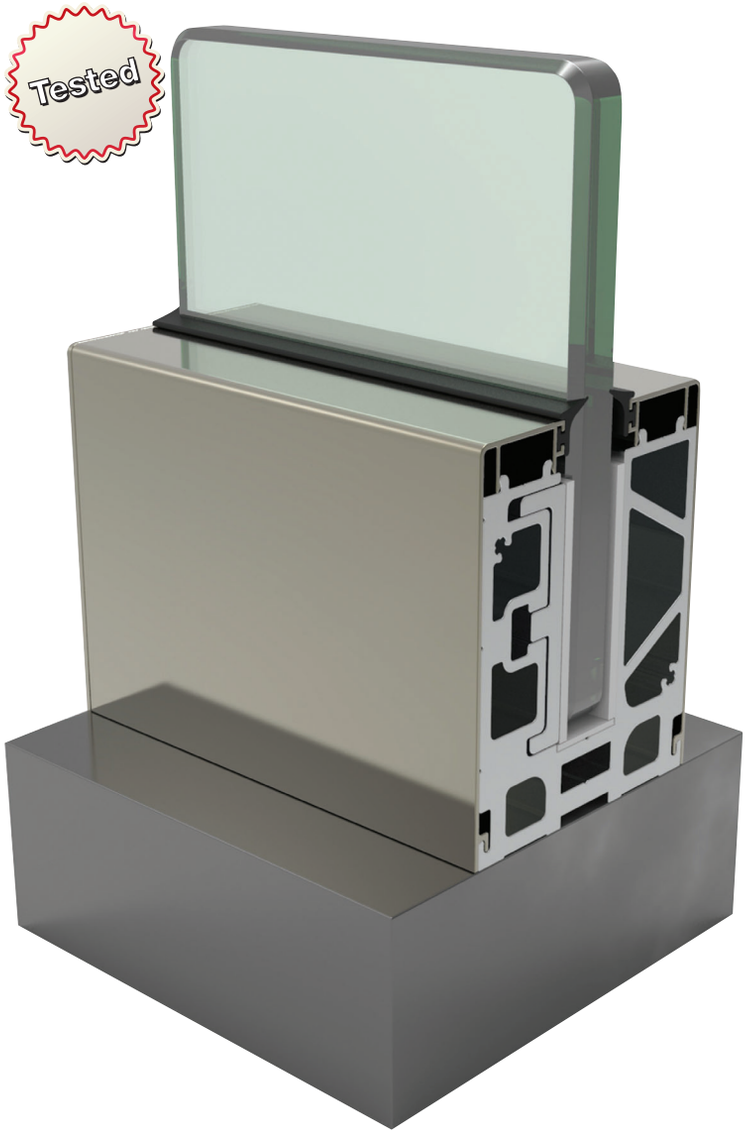
Tested

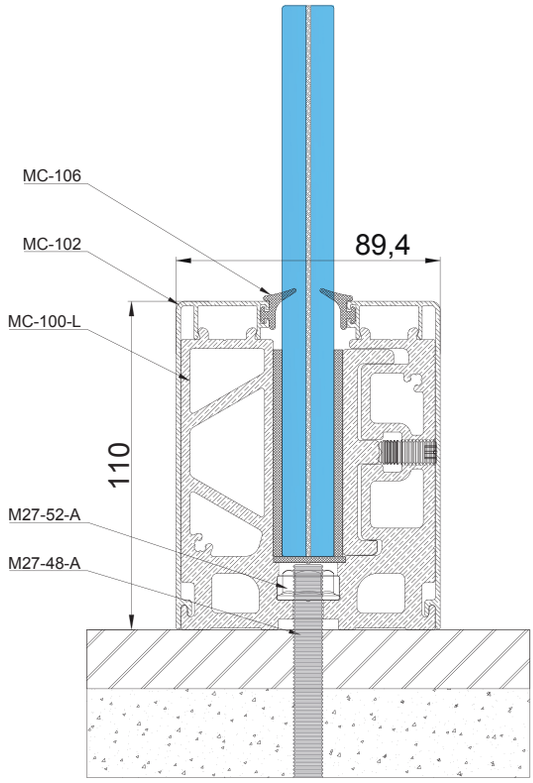
MC-106
MC-102
MC-100-L
M27-52-A
M27-48-A
89,4
110

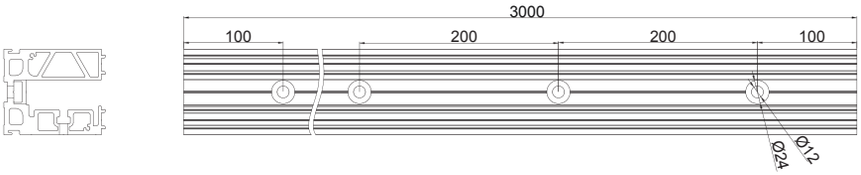
3000
100
200
200
100
Ø12
Ø24

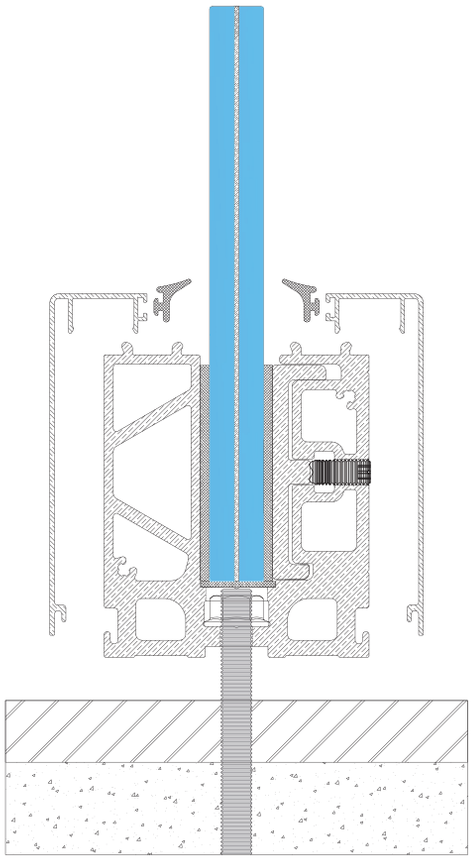

GS-04/L

Tested

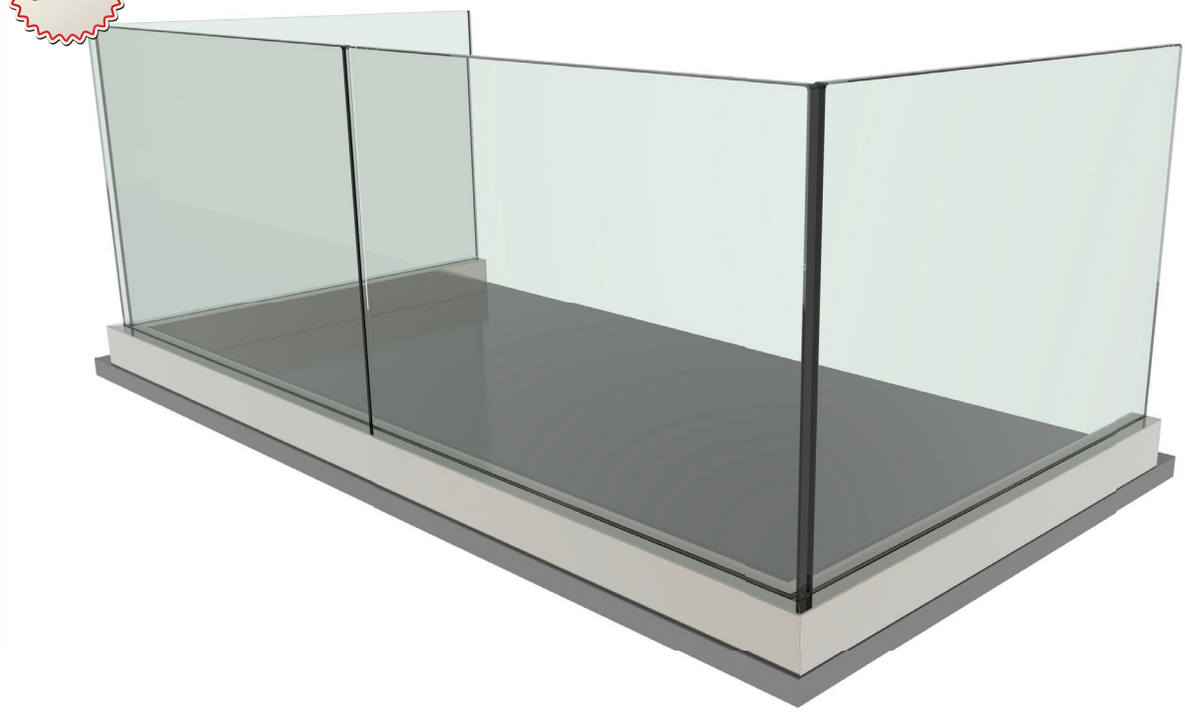

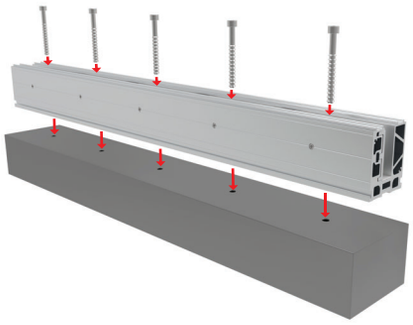

1

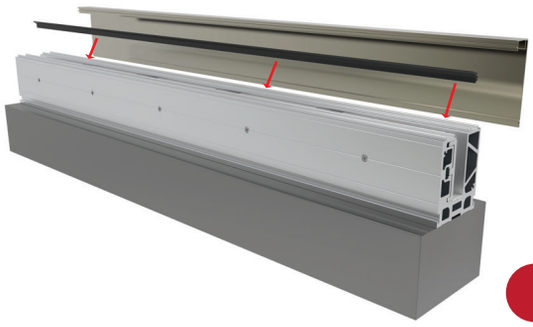

2

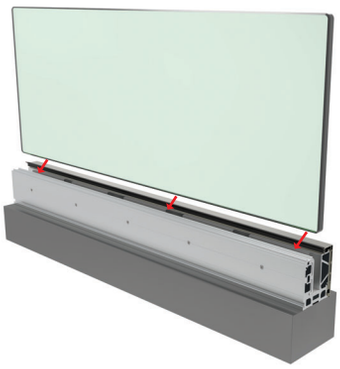

3

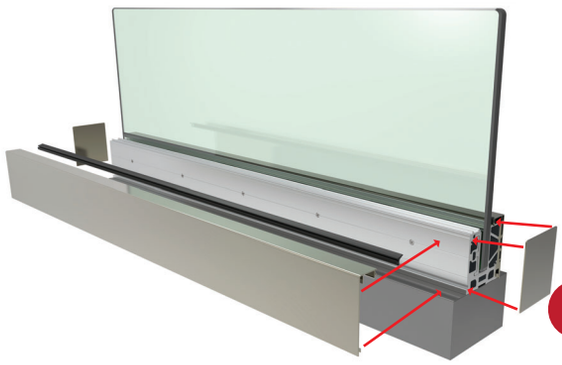

4

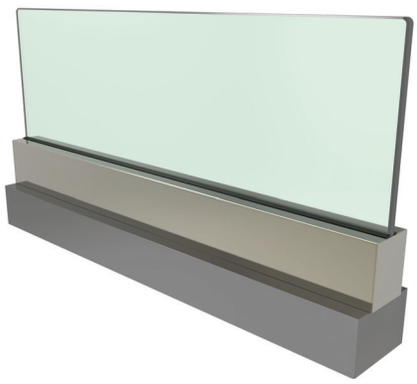

5

GS-04/L

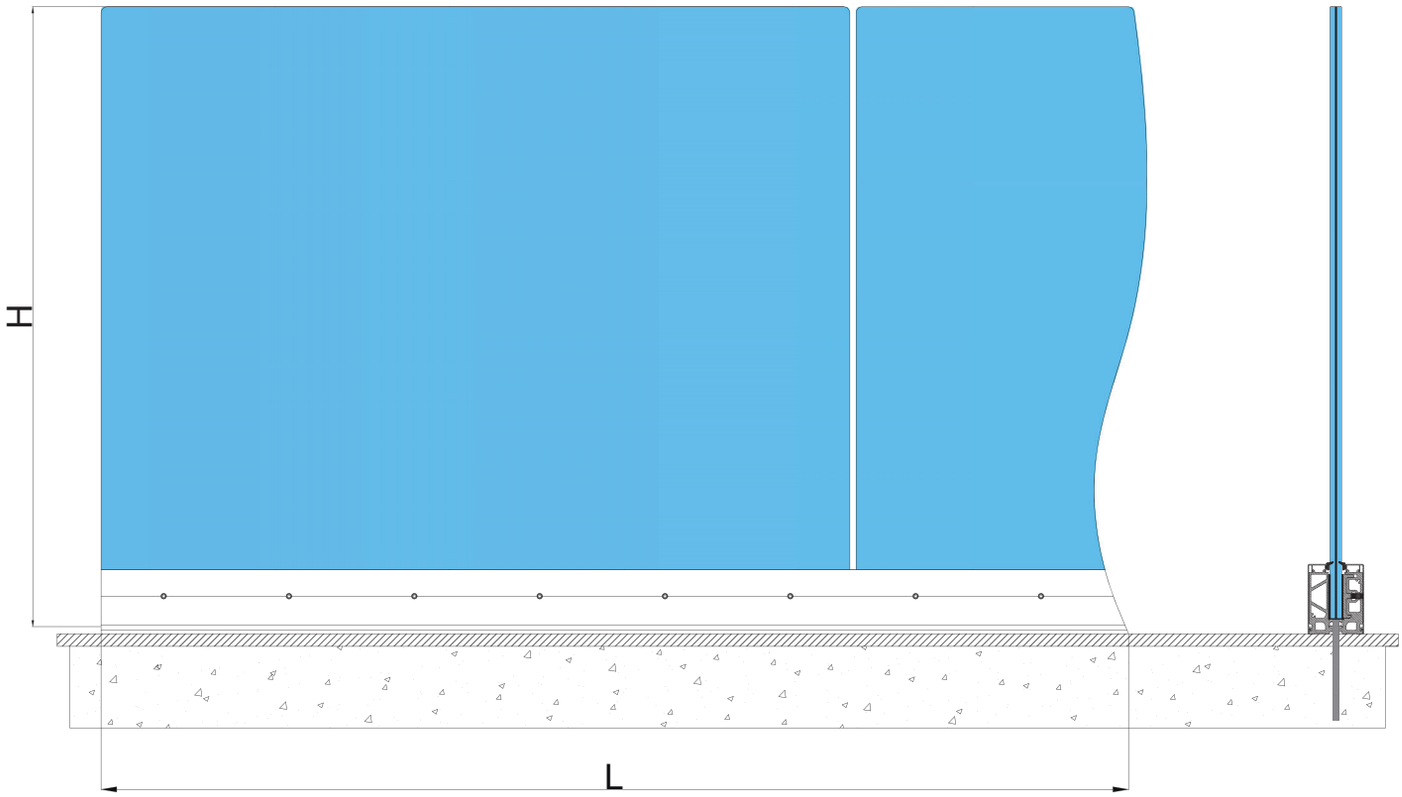

Cam Yüksekliği/H Glass Height/H Hauteur Verre/H Altura De Vidrio/H	Kalınlık (mm) Thickness (mm) Epaisseur (mm) Espesor (mm)	L	(kN)	(J)
0-1200 mm	(5+1,52+5),(6+1,52+6)	3000 mm	-	-
	(8+1,52+8)		5,9	600
	(10+1,52+10)		6,2	600

MC-100/L

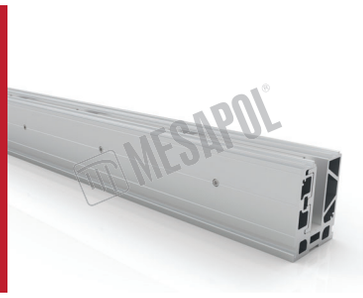

Cam Yatağı Takımı 300 cm
Base Profile Set 300 cm
Kit Profil De Sol 300 cm (Sur Dalle)
Base Perfil 300 cm (Con Cuña Y Plástica Para Apretar el Vidrio)

MC-102

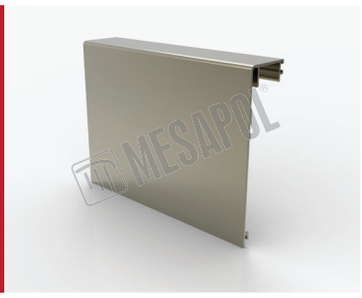

Cam Yatağı Kapağı (4,30 kg / 6 mt)
Base Profile Cover (4,30 kg / 6 mt)
Enjoliveur Profil De Sol (4,30 kg / 6 mt)
Perfil Para Tapa Lateral (4,30 kg / 6 mt)

MC-105

20 mm Cam Için Kapak Fitili (1 mt)
20 mm Glass Gasket For Profile Cover (1 mt)
20 mm Joint D'enjoliveur Pour Verre (1 mt)
20 mm Goma Para Tapa Perfil Letaral (1 mt)

MC-106

10-12-16 mm Cam Için Kapak Fitili (1 mt)
10-12-16 mm Glass Gasket For Profile Cover (1 mt)
10-12-16 mm Joint D'enjoliveur Pour Verre (1 mt)
10-12-16 mm Goma Para İnterior de Tapa Lateral (1 mt)

MC-109

Cam Yatağı Tapası
Plug For Base Profile
Embout De Finiton Pour Profil De Sol
Tapa Final

M27-48/A

M10 Tijli Çubuk 15 cm
M10 Rod 15 cm
M10 Tige Fileté 15 cm
M10 Barra 15 cm

M27-52

M10 Pul
M10 Washer
Rondelle M10
M10 Arandela

M27-52/A

M10 Flanşlı Somun
M10 Nut And Washer
Ecrou Avec Rondelle M10
M10 Tuerca Con Arandela

M27-57

M10*150 Beton Vidası - Multi Monti
M10*150 Concrete Screw - Multi Monti
Vis Béton M10×150
M10*150 Tornillo Para Hormigón - Multi Monti

MC-609

4 ' lük Profil Birleştirme Pimi (30 mm)
4 mm Base Profile Interconnector (30 mm)
4 mm Pièce Connecteur Profil De Sol (30 mm)
4 mm Conector Para Perfil Base (30 mm)

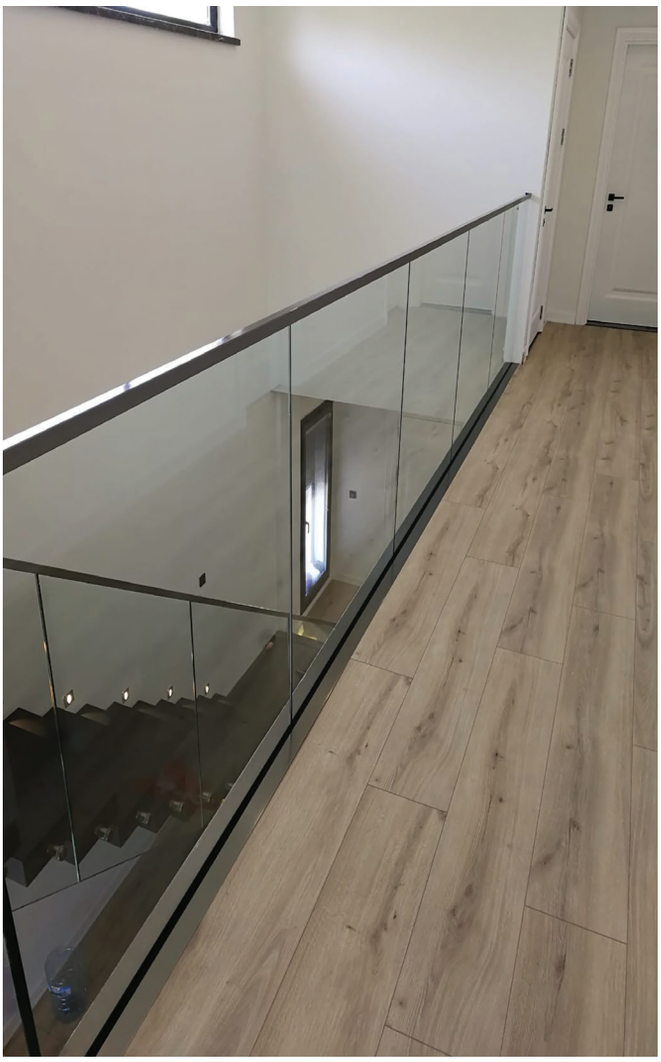

GS-05

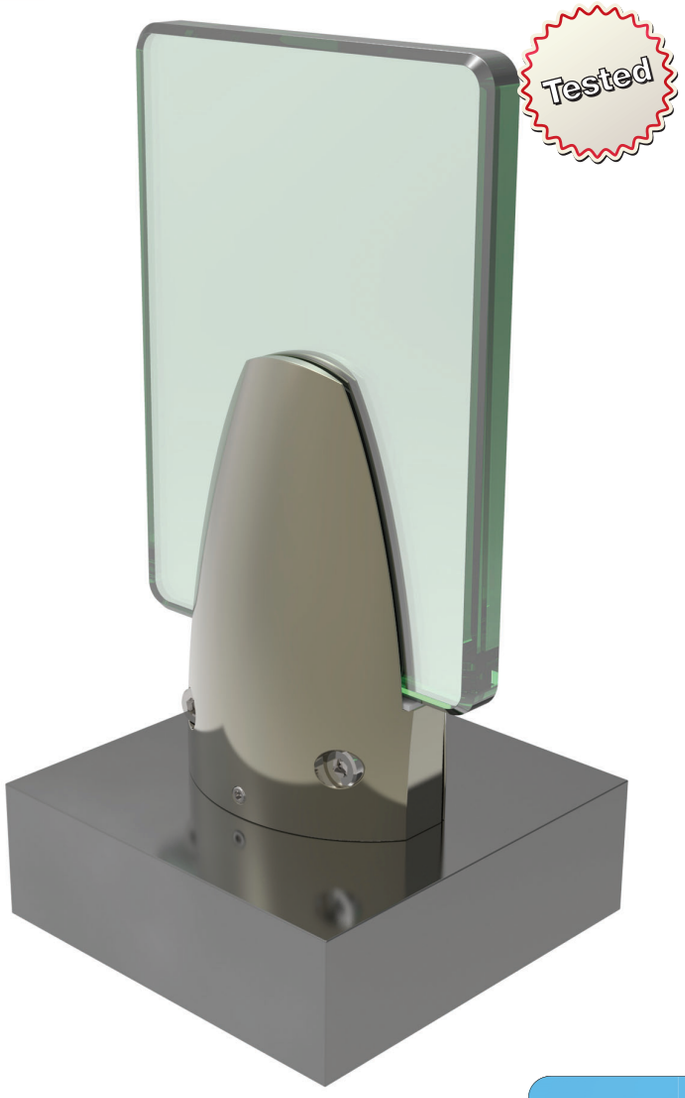

MC-210

Zemin Cam Bağlantı Aparatı Büyük (16-20 mm)
Big Base Glass Holder (16-20 mm)
Pince À Verre De Sol Ovale (Verre 16-20 mm)
Pinza Para Vidrio (16 - 20 mm) (Sin Perforación)

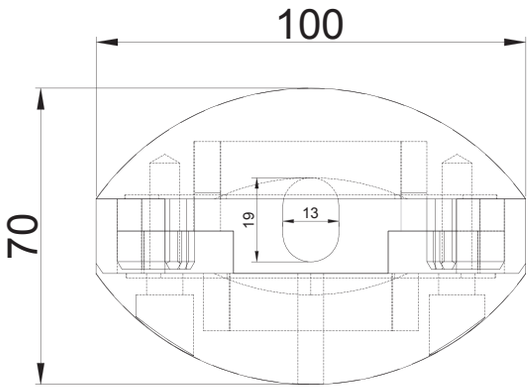

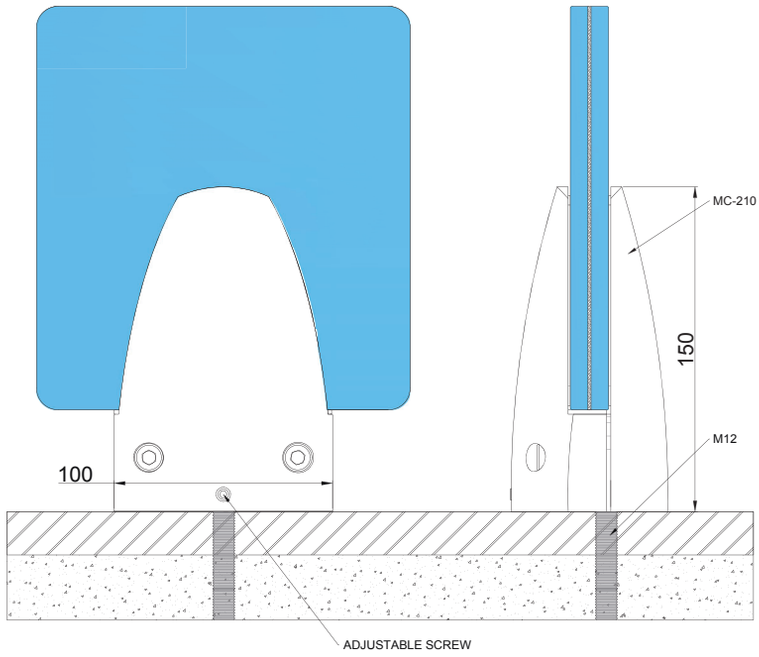

GS-05

Tested

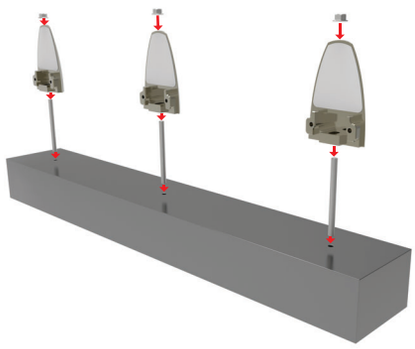

1

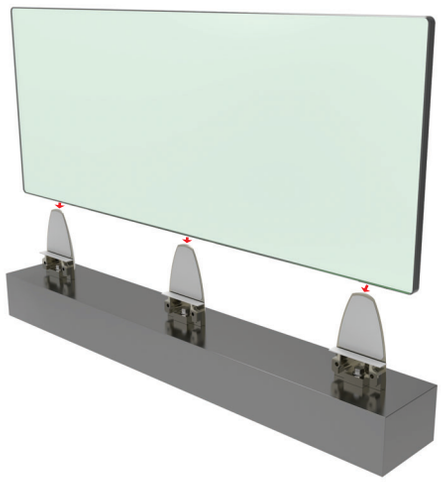

2

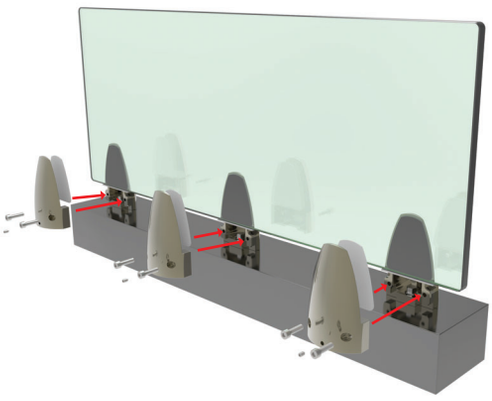

3

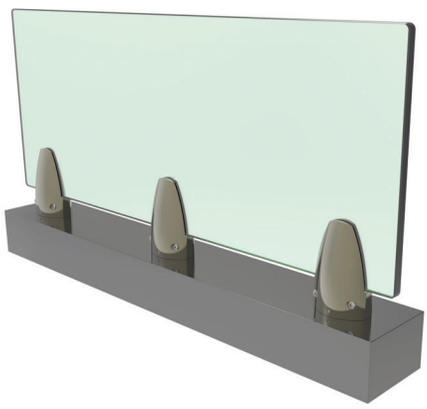

4

GS-05

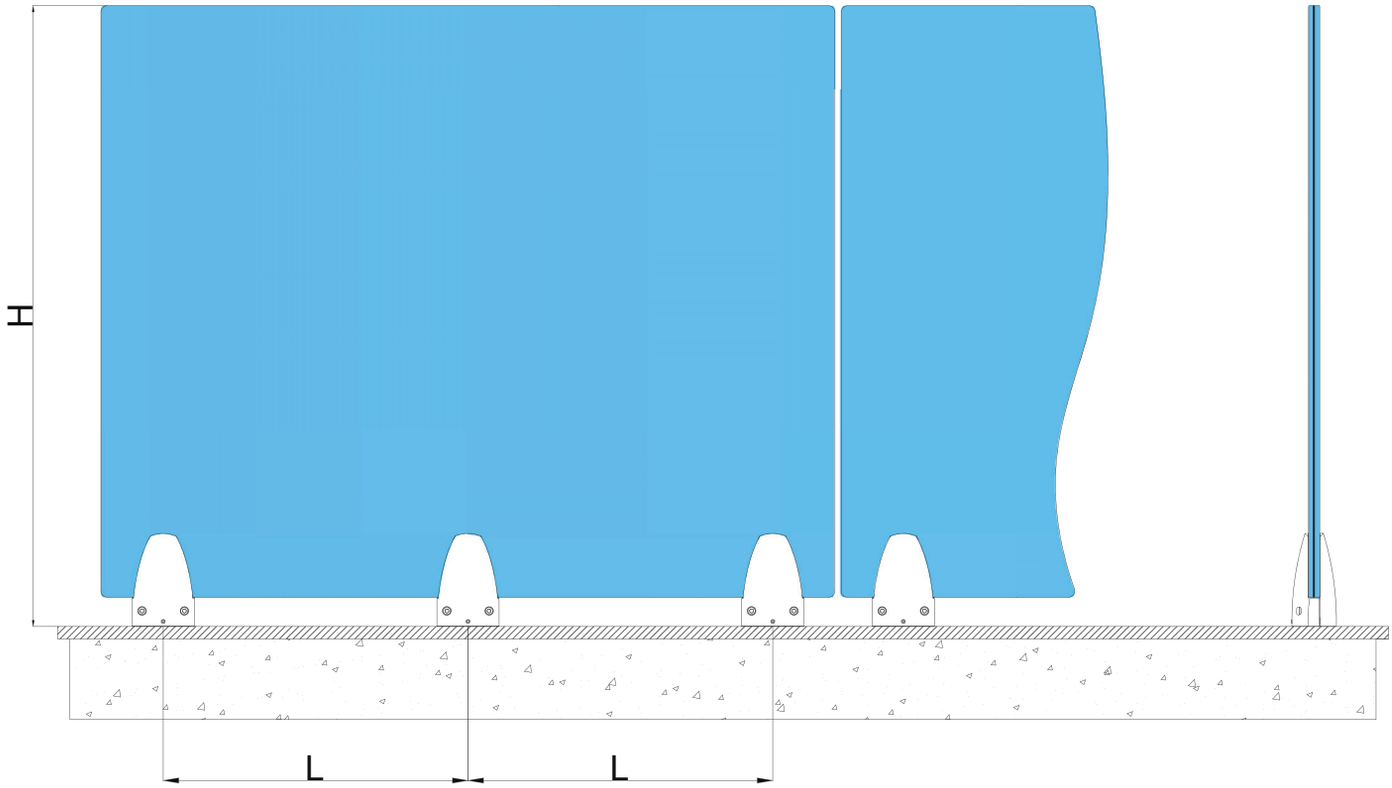

Cam Yüksekliği/H Glass Height/H Hauteur Verre/H Altura De Vidrio/H	Kalınlık (mm) Thickness (mm) Epaisseur (mm) Espesor (mm)	L	(kN)	(J)
0-599 mm	(8+1,52+8),(10+1,52+10)	800 mm	-	-
600-899 mm	(8+1,52+8),(10+1,52+10)	700 mm	-	-
900-1099 mm	(8+1,52+8),(10+1,52+10)	600 mm	-	-
1100-1200 mm	(8+1,52+8),**(10+1,52+10)**	500 mm	2,4	600

*Bina yüksekliğine göre kullanılacak cam kalınlığı ve ürün aralığı değişkenlik gösterebilir.
*Depending on the building's height the measurements and standards may change
*Les épaisseurs de verre et les entraxe peuvent varier selon la hauteur du batiment.
*Dependiendo de la altura del edificio, las medidas y las estandares pueden cambiar

GS-06

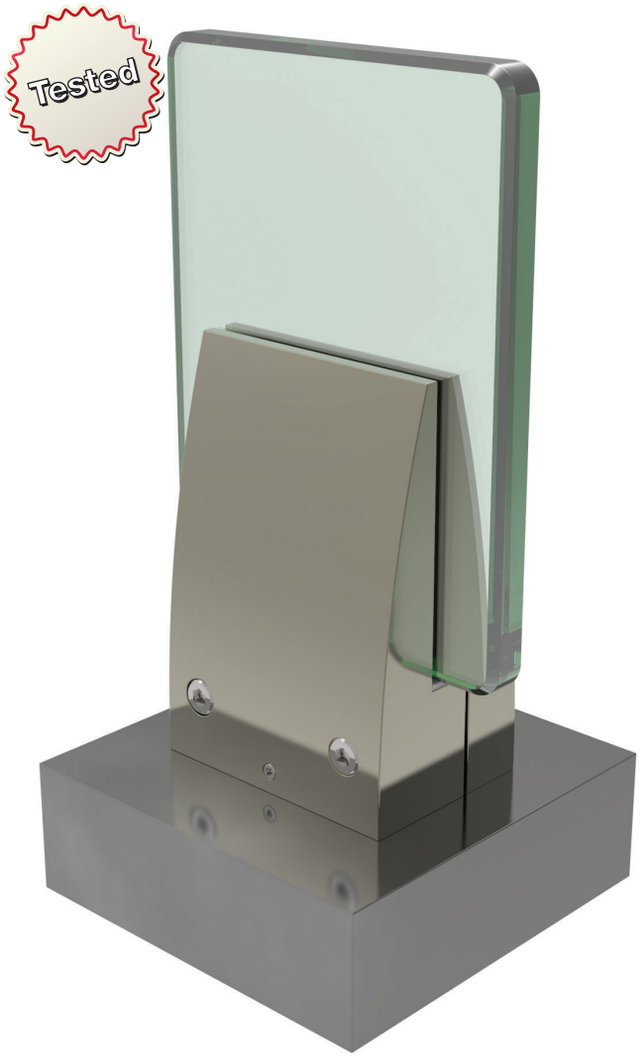

Zemin Cam Bağlantı Aparatı Büyük (16-20 mm)
Big Base Glass Holder (16-20 mm)
Pince À Verre De Sol Carré (Verre 16-20 mm)
Pinza Para Vidrio (16 - 20 mm) (Sin Perforación)

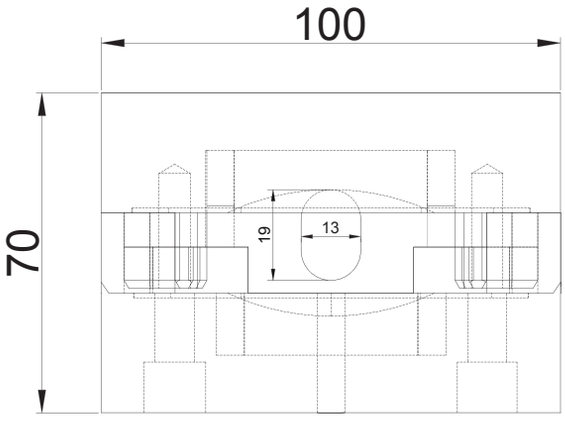

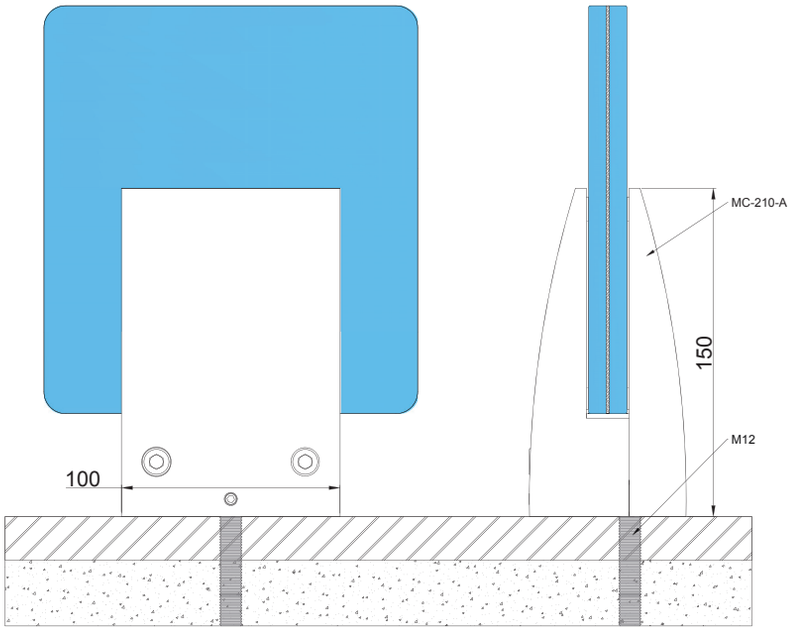

GS-06

Tested

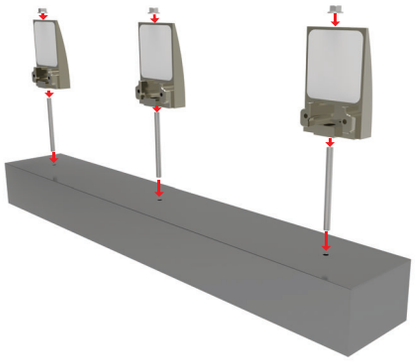

1

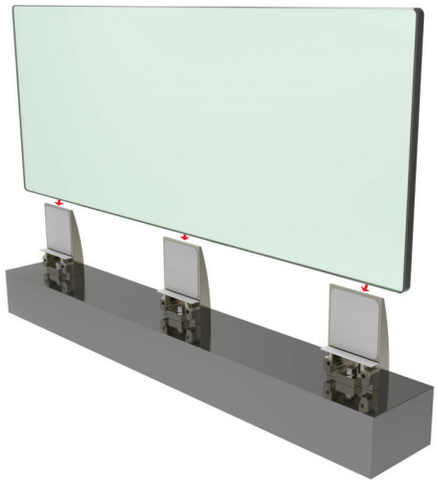

2

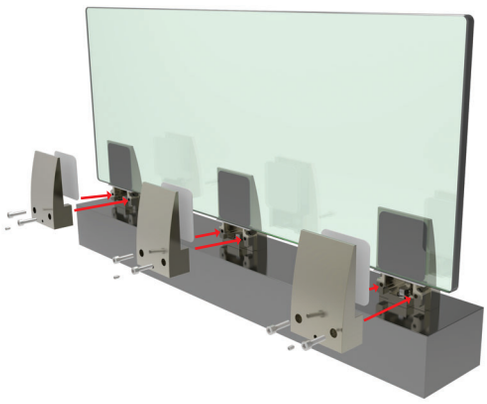

3

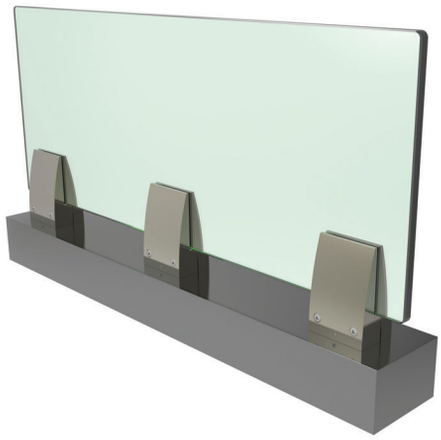

4

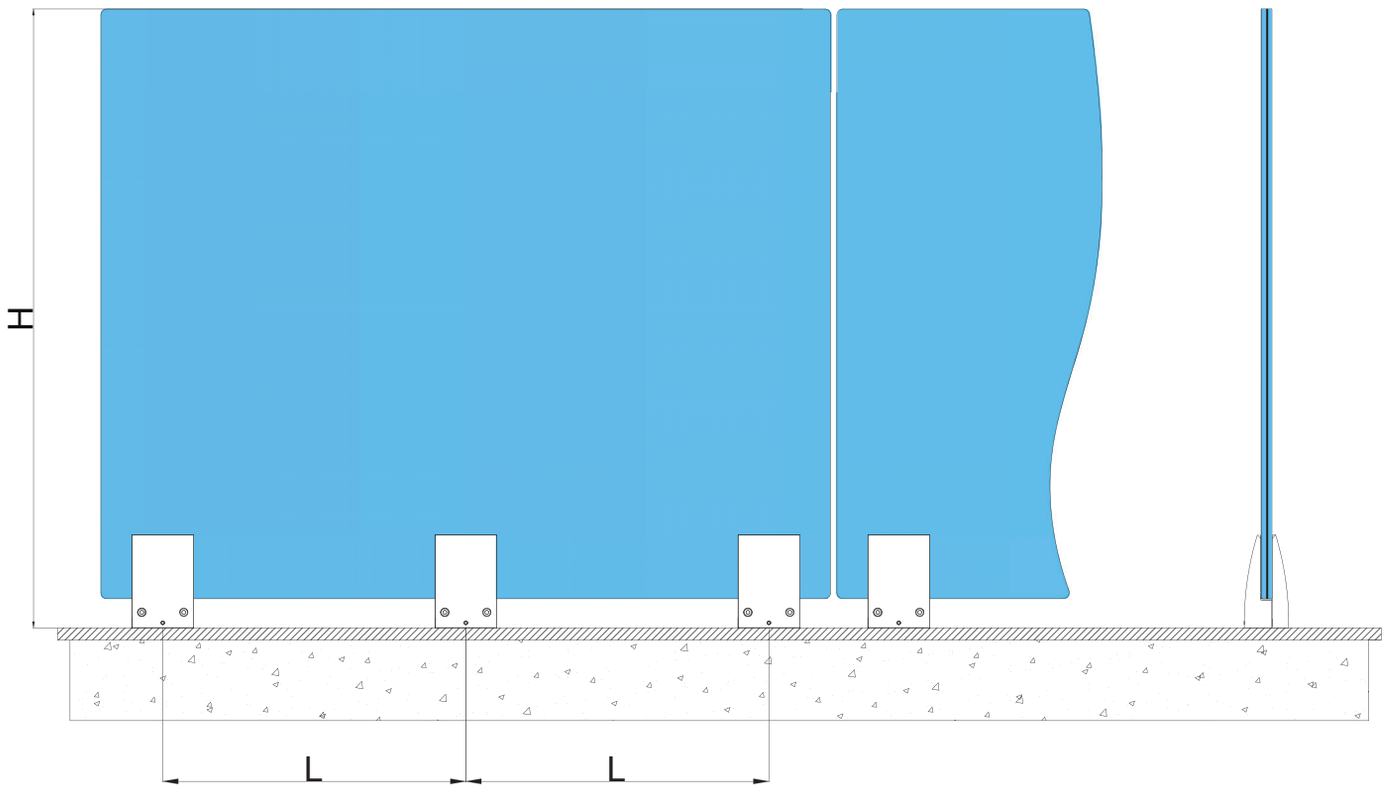

Cam Yüksekliği/H Glass Height/H Hauteur Verre/H Altura De Vidrio/H	Kalınlık (mm) Thickness (mm) Epaisseur (mm) Espesor (mm)	L	(kN)	(J)
0-599 mm	(8+1,52+8),(10+1,52+10)	800 mm	-	-
600-899 mm	(8+1,52+8),(10+1,52+10)	700 mm	-	-
900-1099 mm	(8+1,52+8),(10+1,52+10)	600 mm	-	-
1100-1200 mm	**(8+1,52+8)**,(10+1,52+10)	500 mm	3	600
*Bina yüksekliğine göre kullanılacak cam kalınlığı ve ürün aralığı değişkenlik gösterebilir. *Depending on the building's height the measurements and standards may change *Les épaisseurs de verre et les entraxe peuvent varier selon la hauteur du batiment. *Dependiendo de la altura del edificio, las medidas y las estandares pueden cambiar				

GS-07

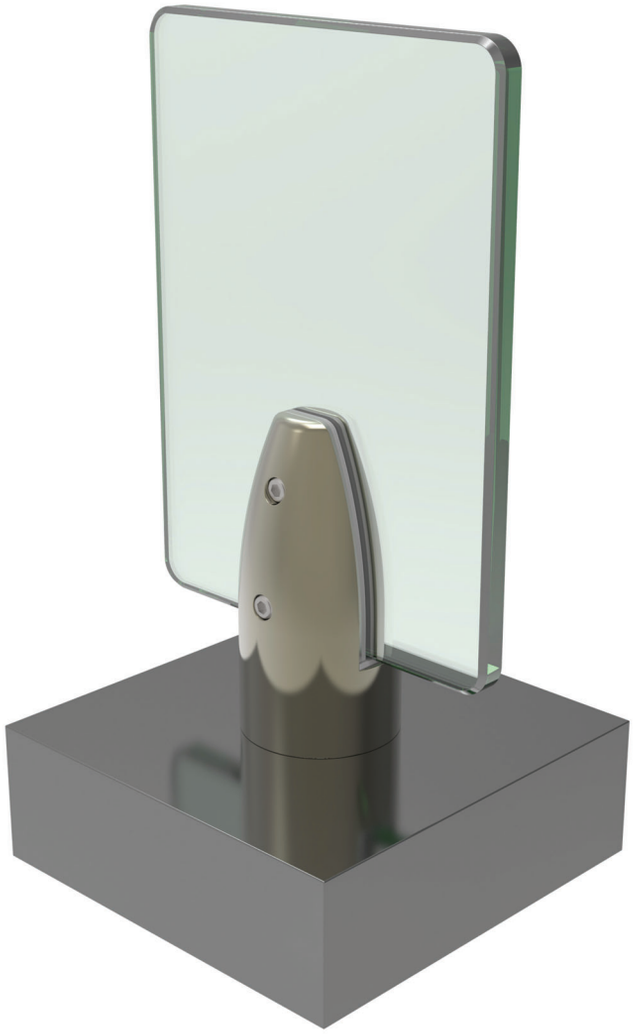

MC-209

Zemin Cam Bağlantı Aparatı Küçük (10-12 mm)
Small Base Glass Holder (10-12 mm)
Pince À Verre De Sol Ovale (Verre 10-12 mm)
Pinza Para Vidrio (10 - 12 mm) (Sin Perforación)

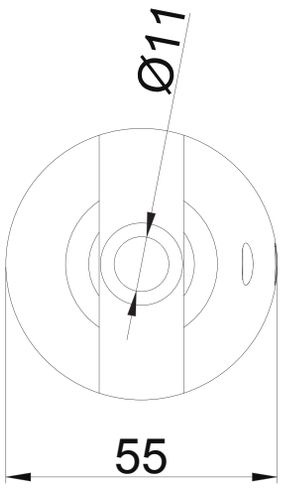

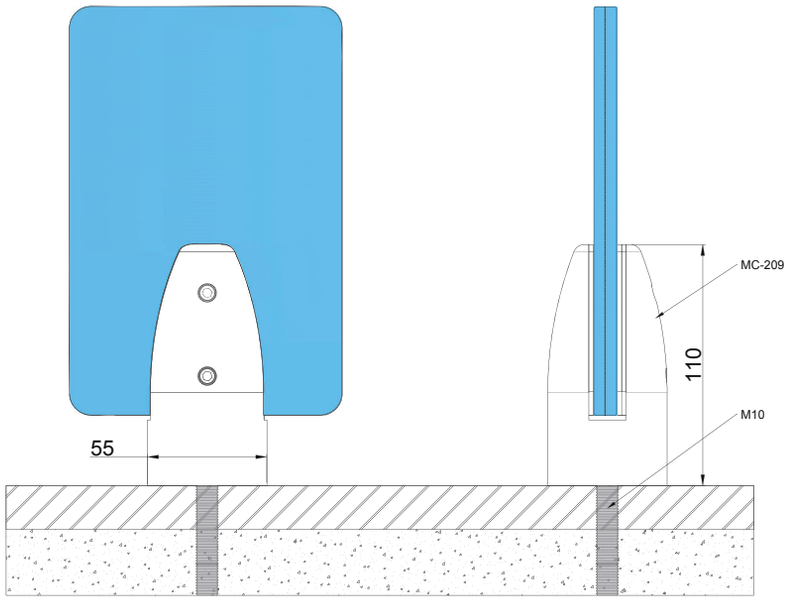

GS-07

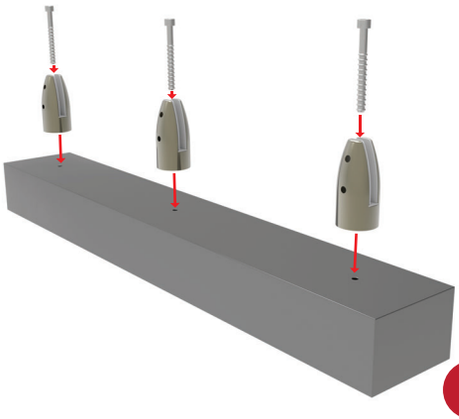

1

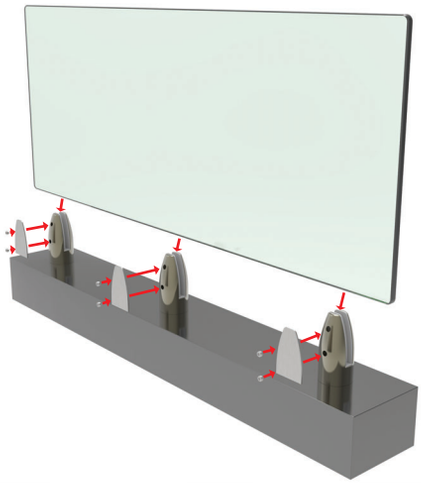

2

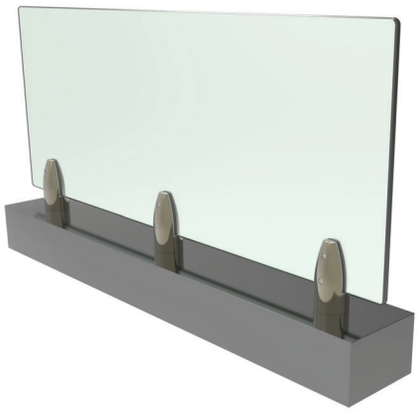

3

GS-07

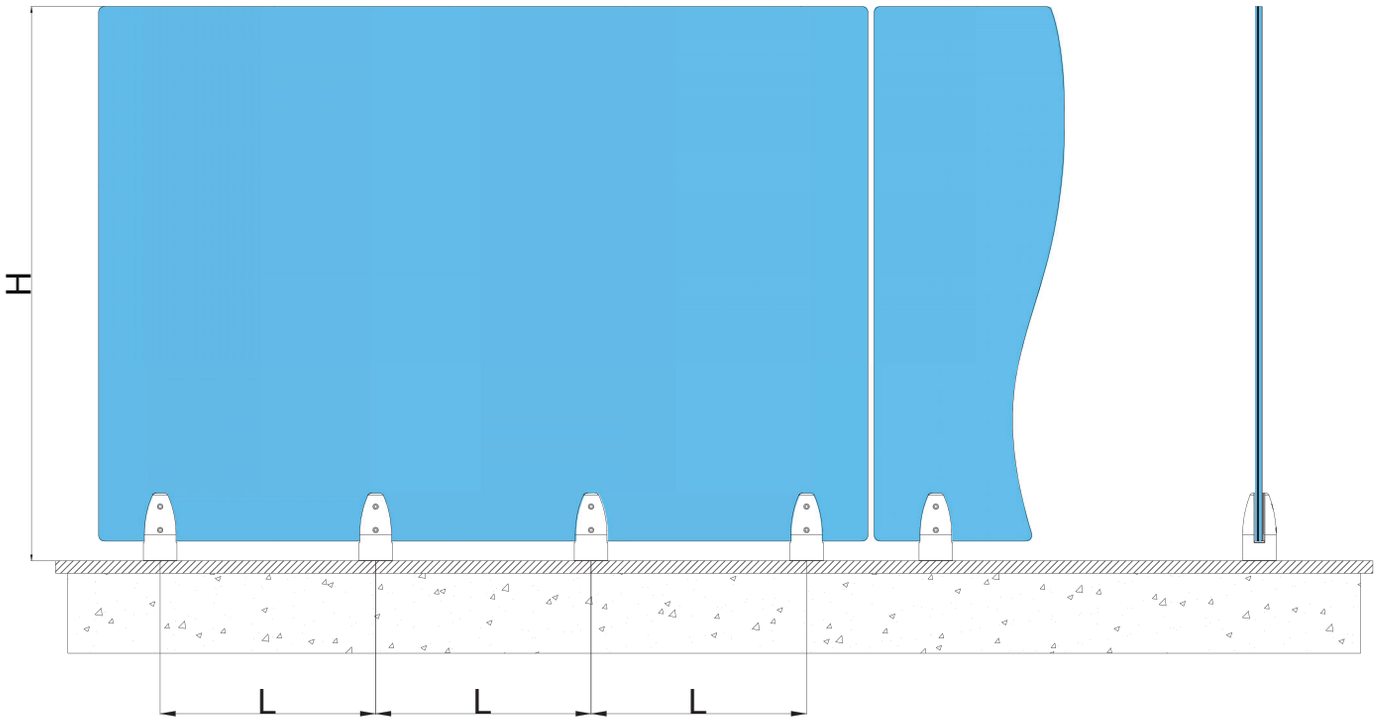

Cam Yüksekliği/H Glass Height/H Hauteur Verre/H Altura De Vidrio/H	Kalınlık (mm) Thickness (mm) Epaisseur (mm) Espesor (mm)	L	(kN)	(J)
0-599 mm	(5+1,52+5),(6+1,52+6)	700 mm	-	-
600-899 mm	(5+1,52+5),(6+1,52+6)	600 mm	-	-
900-1099 mm	(5+1,52+5),(6+1,52+6)	500 mm	-	-
1100-1200 mm	(5+1,52+5),(6+1,52+6)	400 mm	-	-
*Bina yüksekliğine göre kullanılacak cam kalınlığı ve ürün aralığı değişkenlik gösterebilir. *Depending on the building's height the measurements and standards may change *Les épaisseurs de verre et les entraxe peuvent varier selon la hauteur du batiment. *Dependiendo de la altura del edificio, las medidas y las estandares pueden cambiar				

GS-07/A

MC-209/C

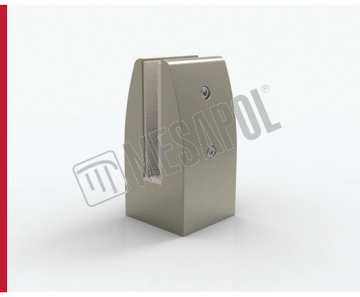

Zemin Cam Bağlantı Aparatı Küçük Kare (10-12 mm)
Small Base Glass Holder (10-12 mm)
Pince À Verre De Sol Carré (Verre 10-12 mm)
Pinza Para Vidrio (10 - 12 mm) (Sin Perforación)

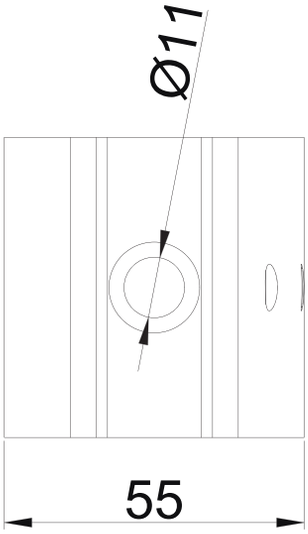

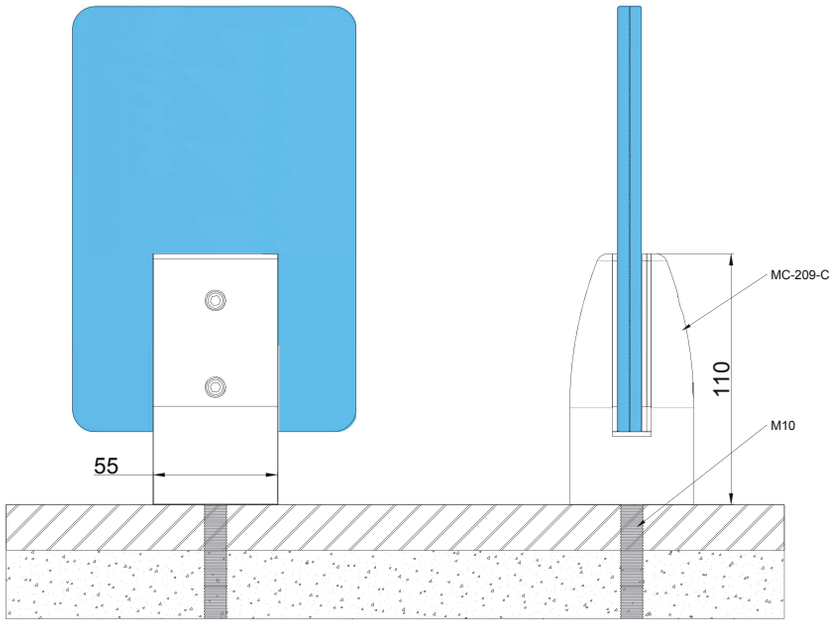

GS-07/A

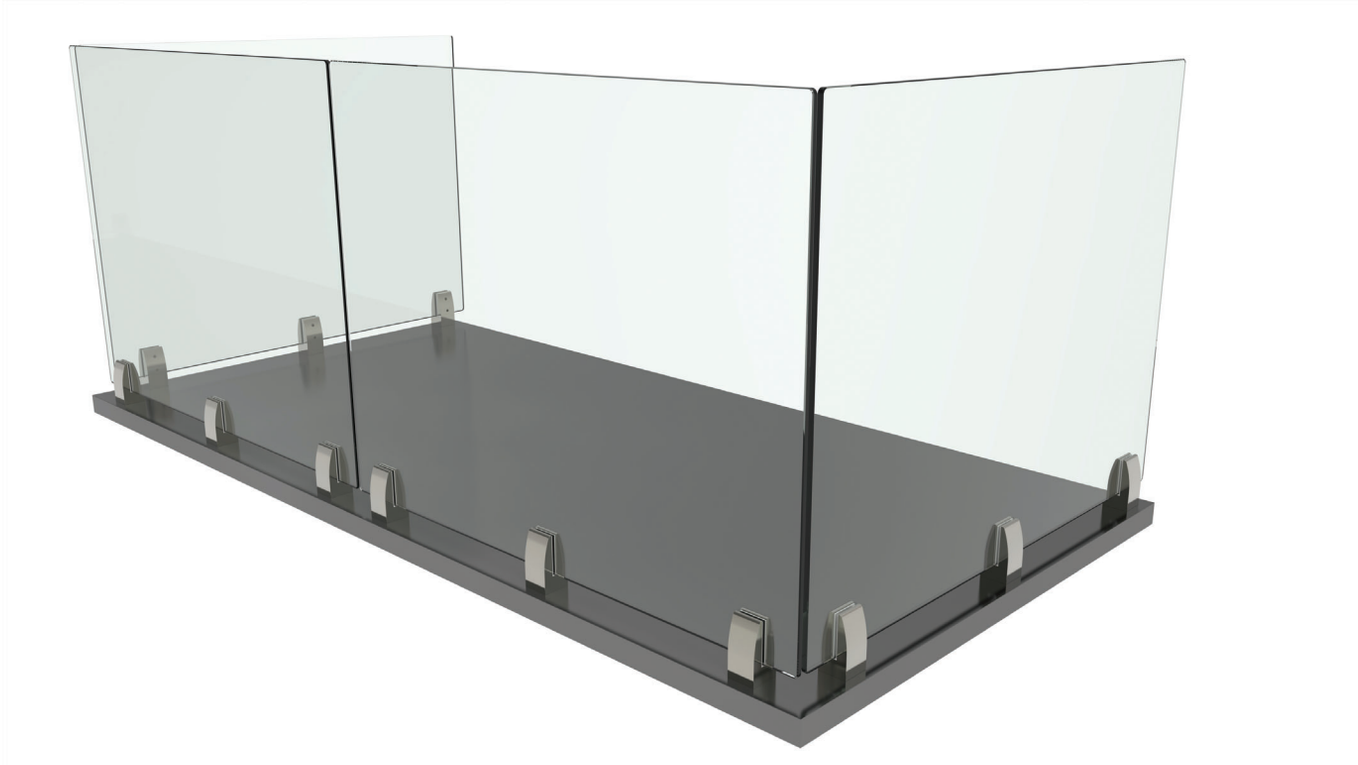

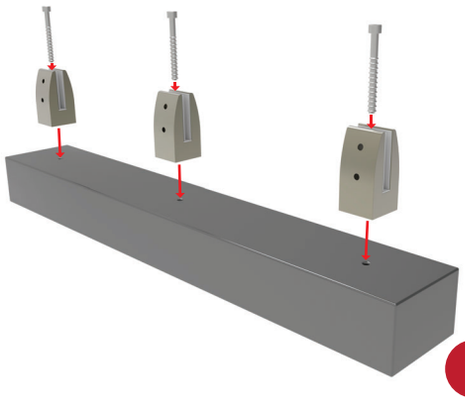

1

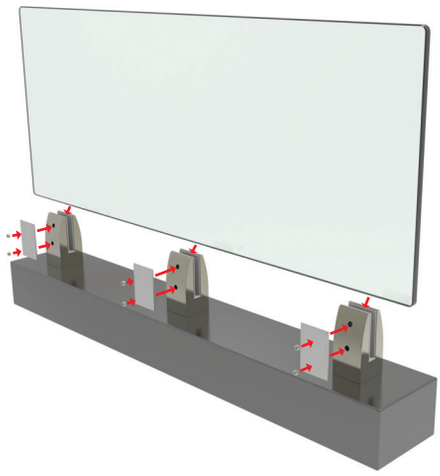

2

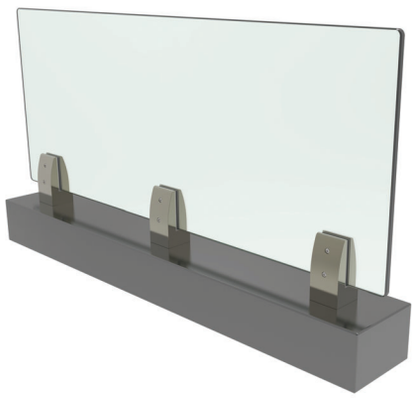

3

GS-07/A

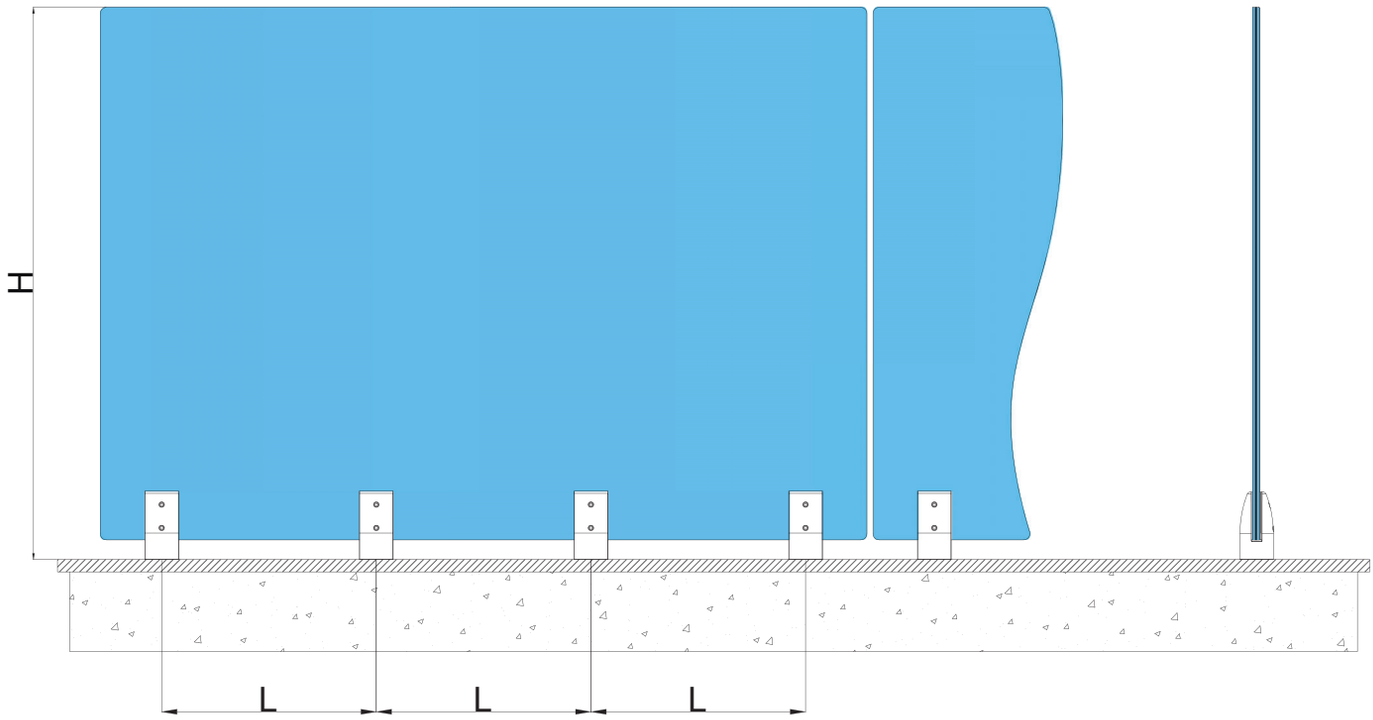

Cam Yüksekliği/H Glass Height/H Hauteur Verre/H Altura De Vidrio/H	Kalınlık (mm) Thickness (mm) Epaisseur (mm) Espesor (mm)	L	(kN)	(J)
0-599 mm	(5+1,52+5),(6+1,52+6)	700 mm	-	-
600-899 mm	(5+1,52+5),(6+1,52+6)	600 mm	-	-
900-1099 mm	(5+1,52+5),(6+1,52+6)	500 mm	-	-
1100-1200 mm	(5+1,52+5),(6+1,52+6)	400 mm	-	-

*Bina yüksekliğine göre kullanılacak cam kalınlığı ve ürün aralığı değişkenlik gösterebilir.
*Depending on the building's height the measurements and standards may change
*Les épaisseurs de verre et les entraxe peuvent varier selon la hauteur du batiment.
*Dependiendo de la altura del edificio, las medidas y las estandares pueden cambiar

GS-07/B

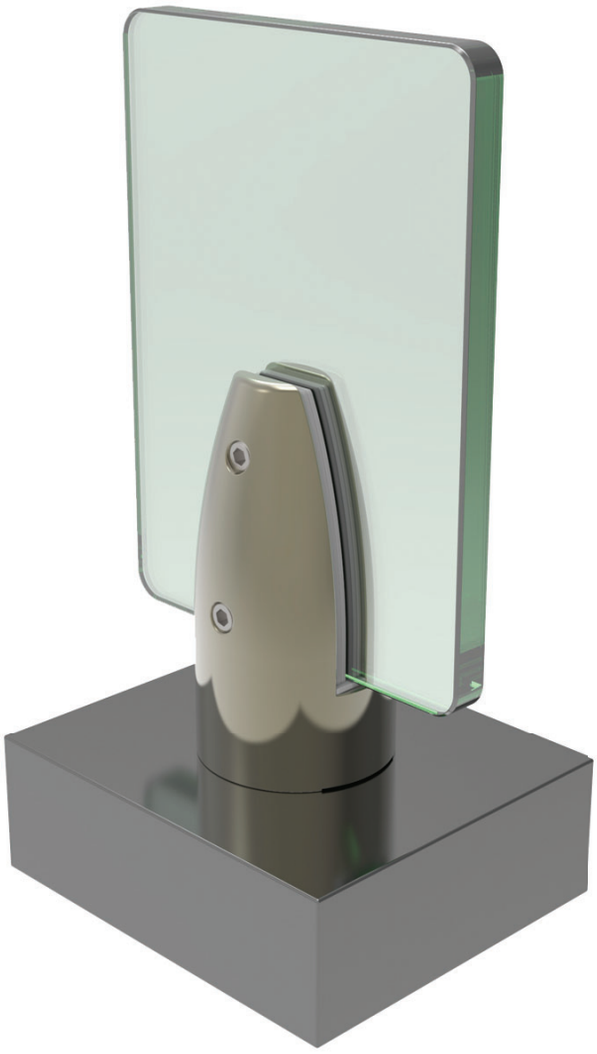

MC-209/D

Zemin Cam Bağlantı Aparatı Yuvarlak (12 - 16 mm)
Medium Base Glass Holder (12 - 16 mm)
Pince À Verre De Sol Ovale (Verre 12-16 mm)
Pinza Para Vidrio (12 - 16 mm) (Sin Perforación)

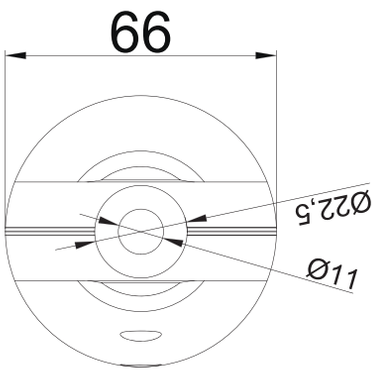

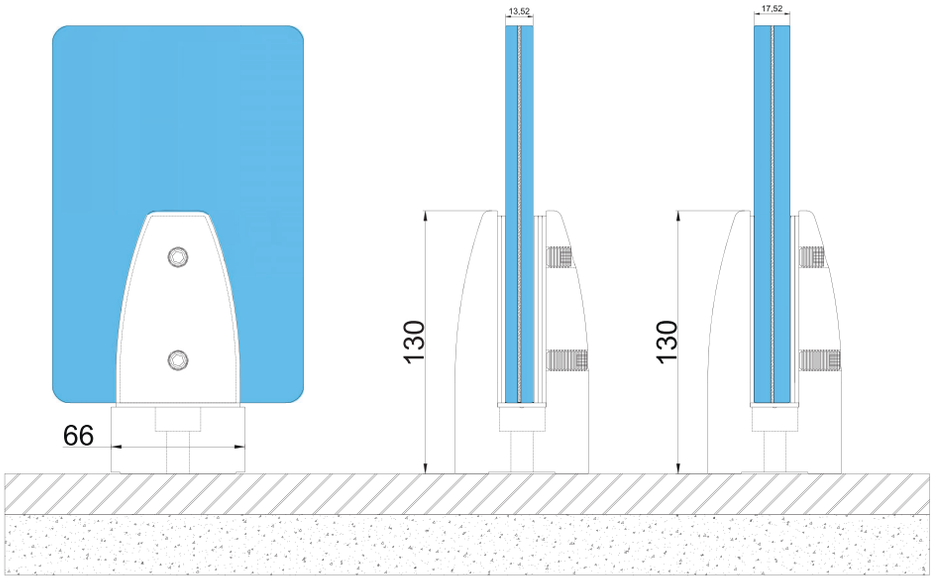

GS-07/B

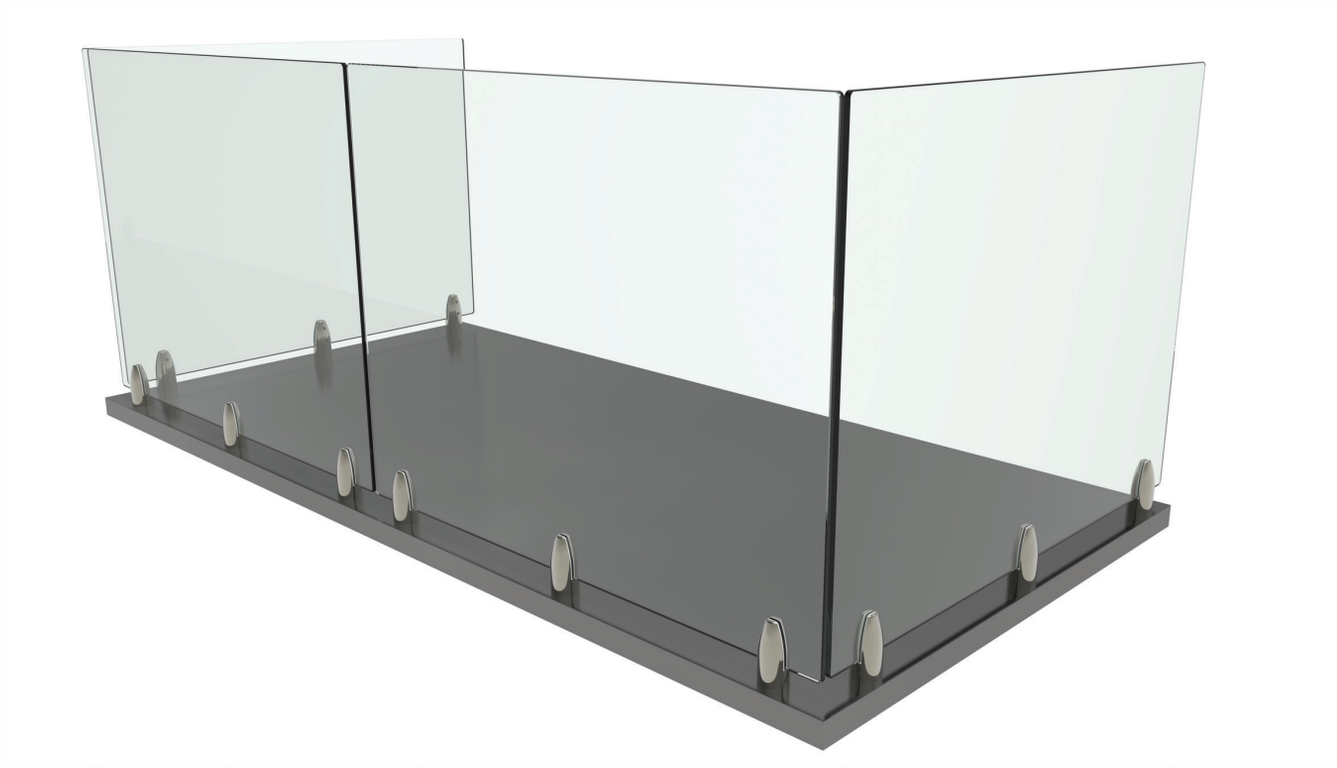

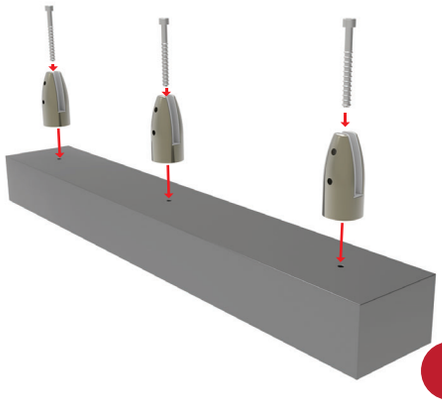

1

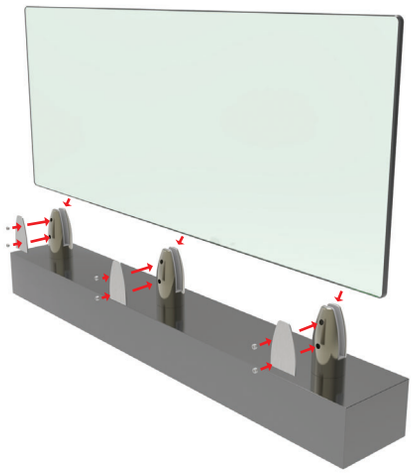

2

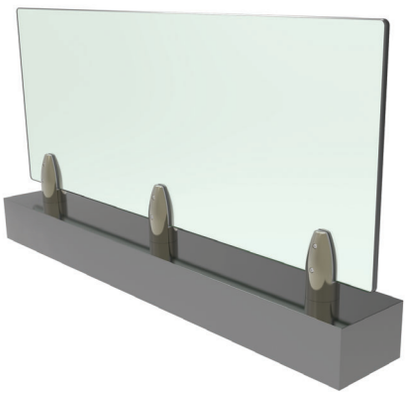

3

GS-07/B

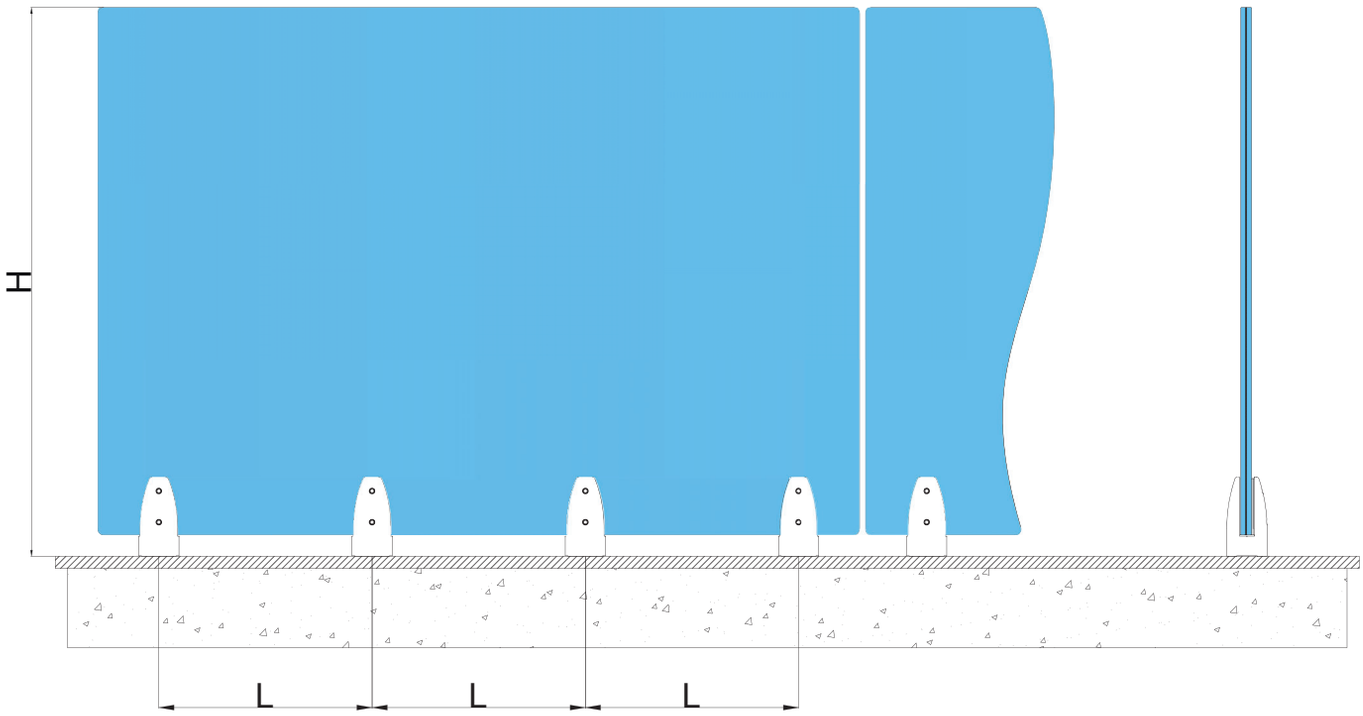

Cam Yüksekliği/H Glass Height/H Hauteur Verre/H Altura De Vidrio/H	Kalınlık (mm) Thickness (mm) Epaisseur (mm) Espesor (mm)	L	(kN)	(J)
0-599 mm	(6+1,52+6),(8+1,52+8)	700 mm	-	-
600-899 mm	(6+1,52+6),(8+1,52+8)	600 mm	-	-
900-1099 mm	(6+1,52+6),(8+1,52+8)	500 mm	-	-
1100-1200 mm	(6+1,52+6),**(8+1,52+8)**	400 mm	3,04	600

GS-07/C

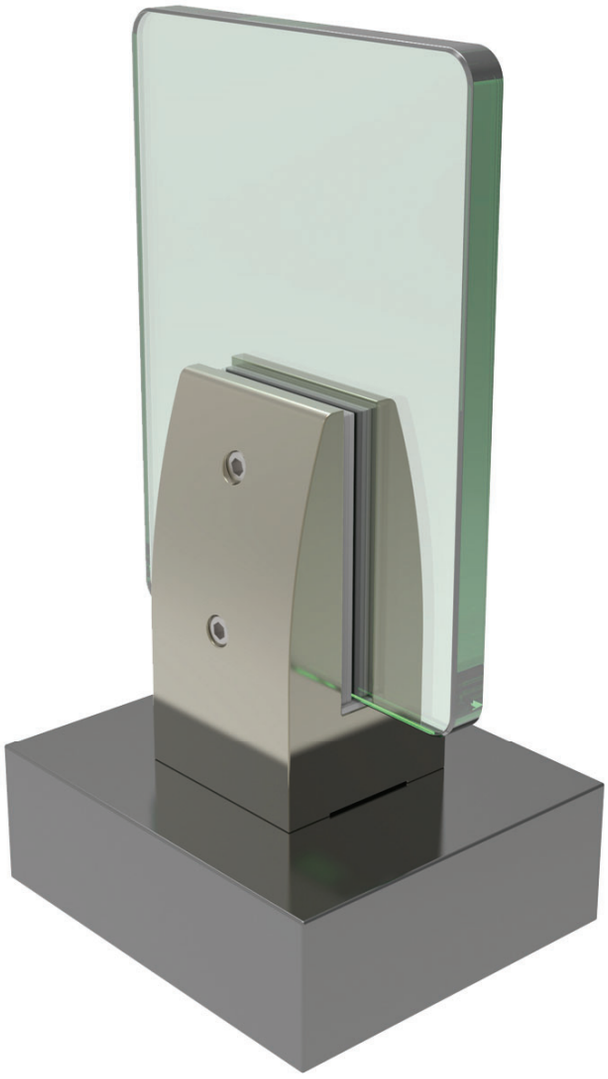

MC-209/E

Zemin Cam Bağlantı Aparatı Kare (12 - 16 mm)
Medium Base Glass Holder (12-16 mm)
Pince À Verre De Sol Carré (Verre 12-16 mm)
Pinza Para Vidrio (12 - 16 mm) (Sin Perforación)

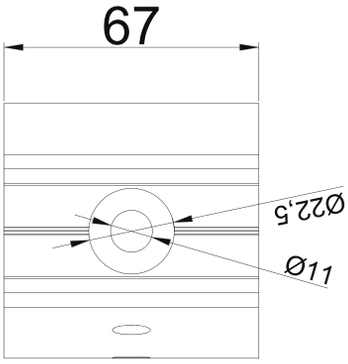

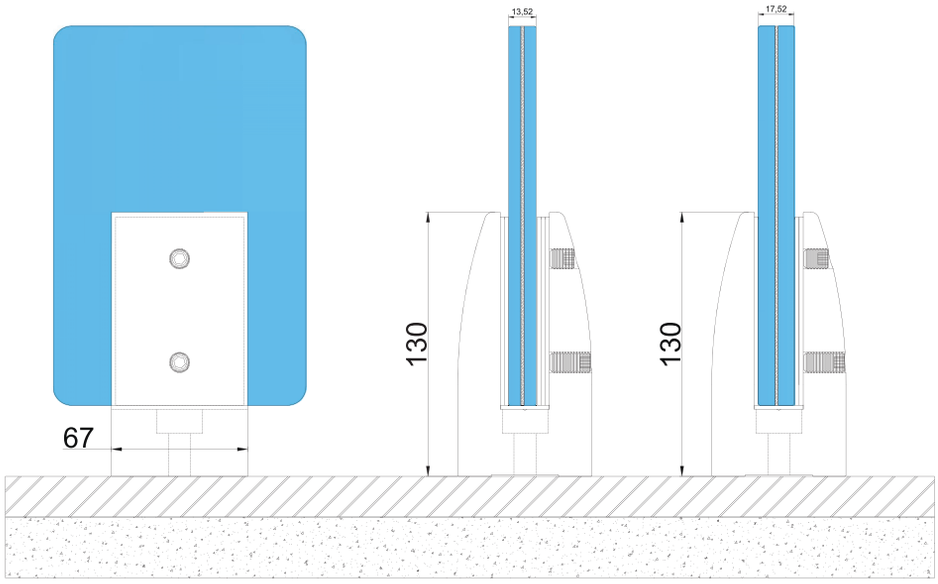

GS-07/C

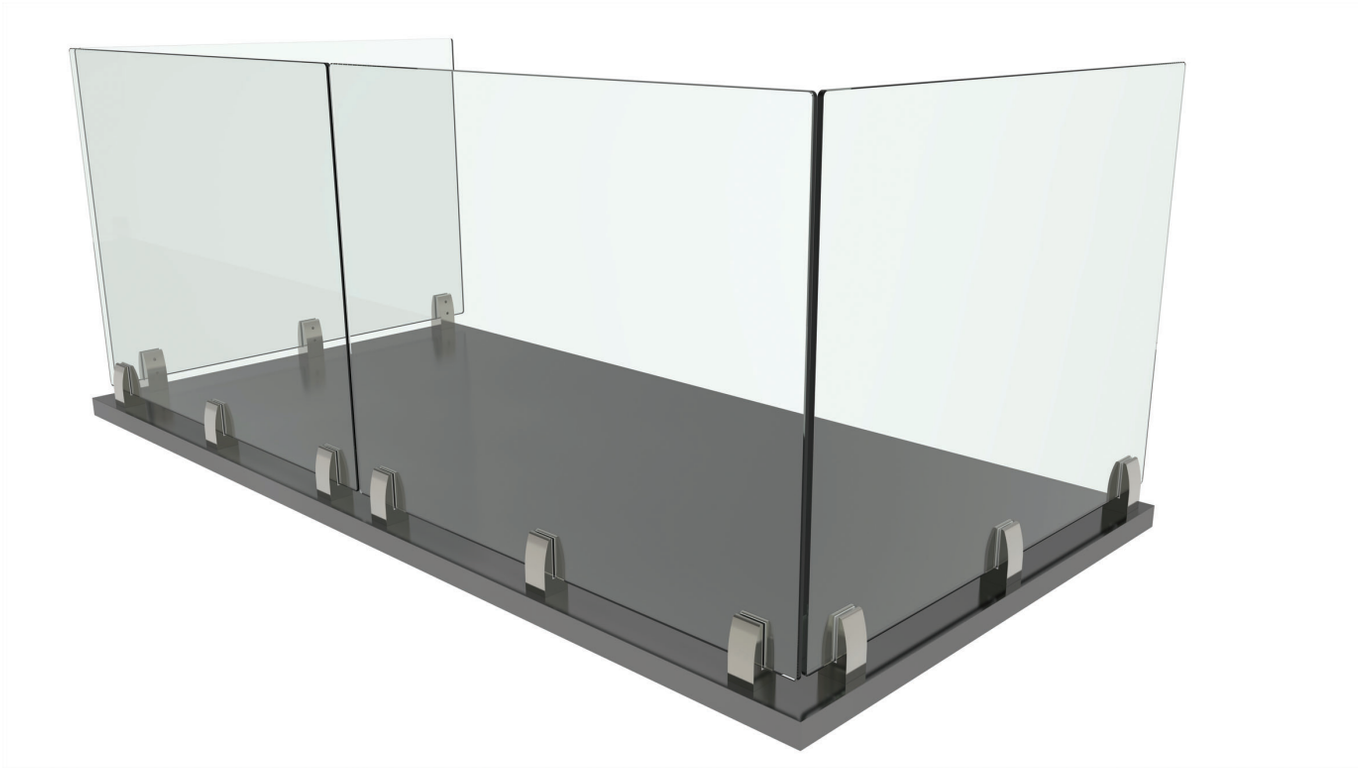

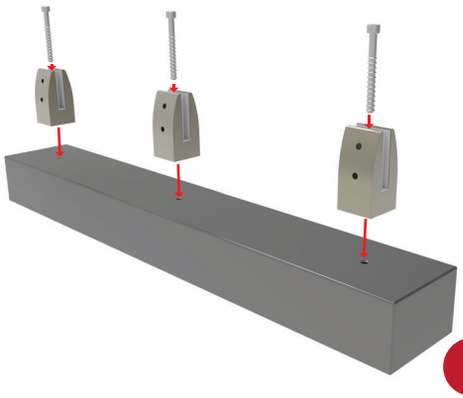

1

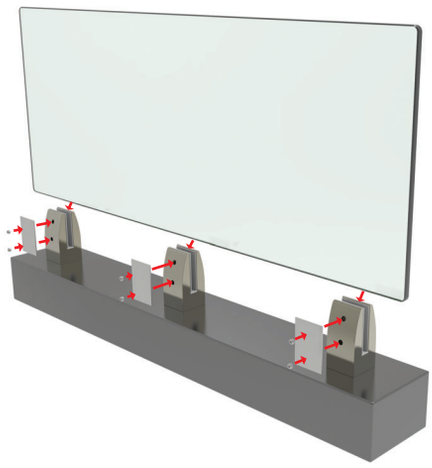

2

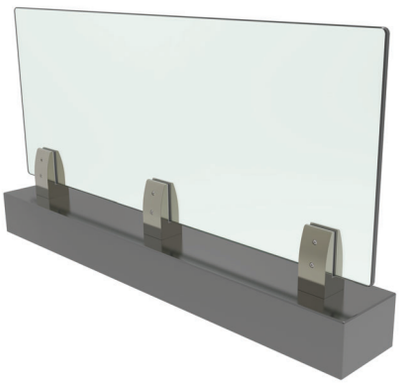

3

GS-07/C

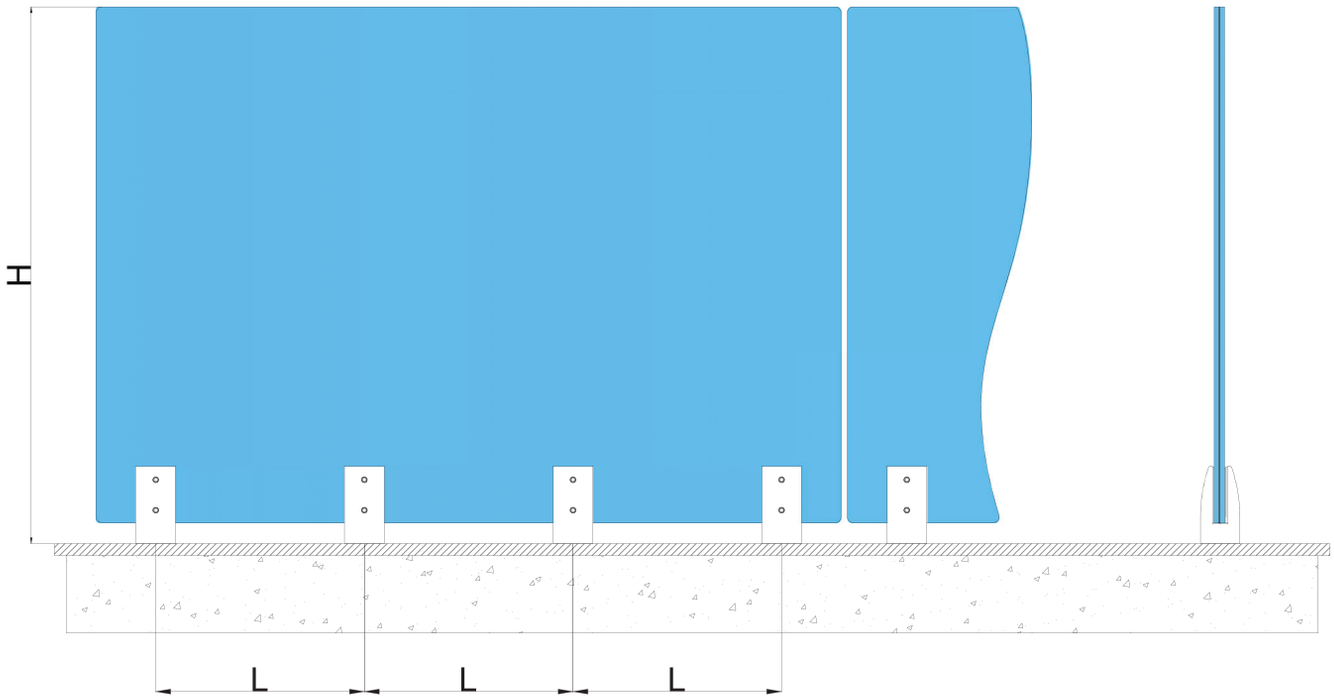

Cam Yüksekliği/H Glass Height/H Hauteur Verre/H Altura De Vidrio/H	Kalınlık (mm) Thickness (mm) Epaisseur (mm) Espesor (mm)	L	(kN)	(J)
0-599 mm	(6+1,52+6),(8+1,52+8)	700 mm	-	-
600-899 mm	(6+1,52+6),(8+1,52+8)	600 mm	-	-
900-1099 mm	(6+1,52+6),(8+1,52+8)	500 mm	-	-
1100-1200 mm	(6+1,52+6)	400 mm	-	-
	(8+1,52+8)		3,04	600

GS-07/D

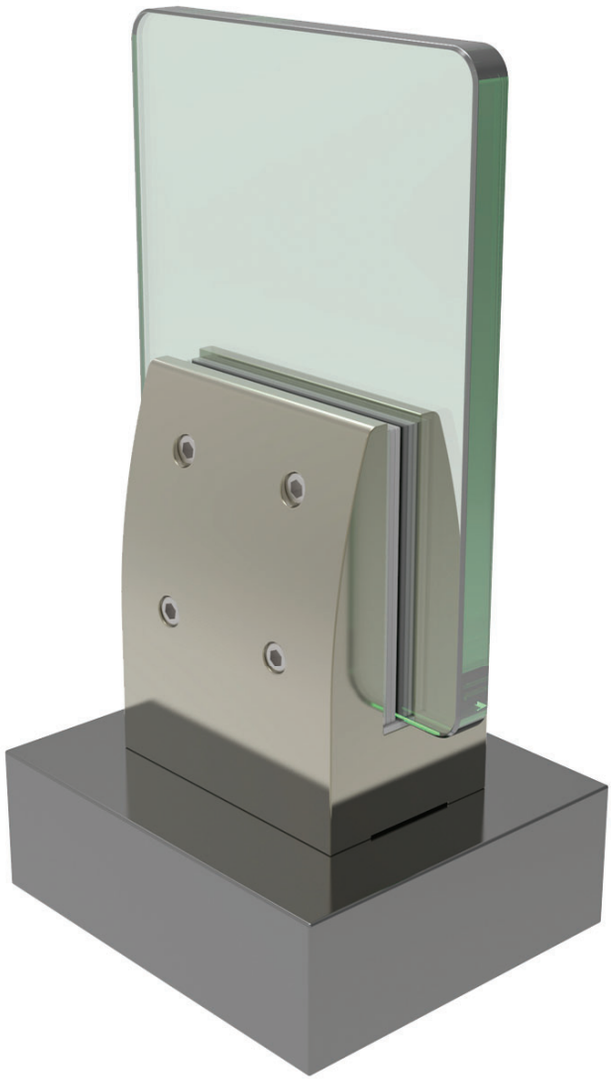

MC-209/F

Zemin Cam Bağlantı Aparatı Kare Uzun (12 - 16 mm)
Medium Base Glass Holder (12-16 mm)
Pince À Verre De Sol Carré (Verre 12-16 mm)
Pinza Para Vidrio (12 - 16 mm) (Sin Perforación)

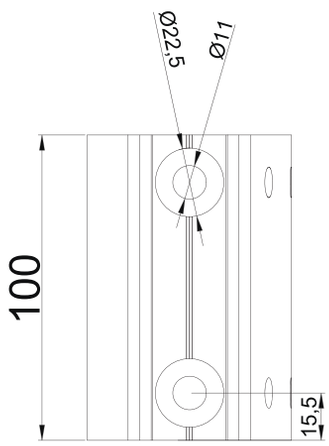

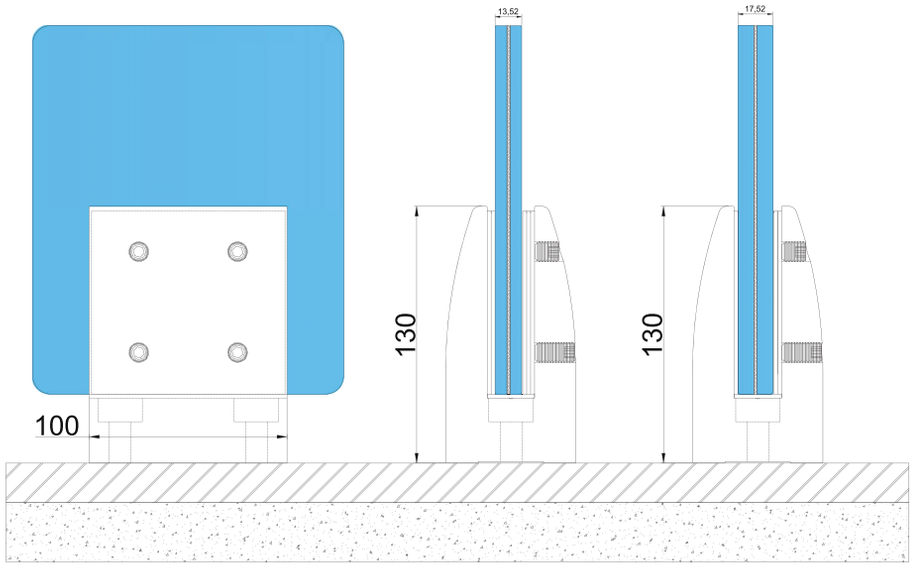

GS-07/D

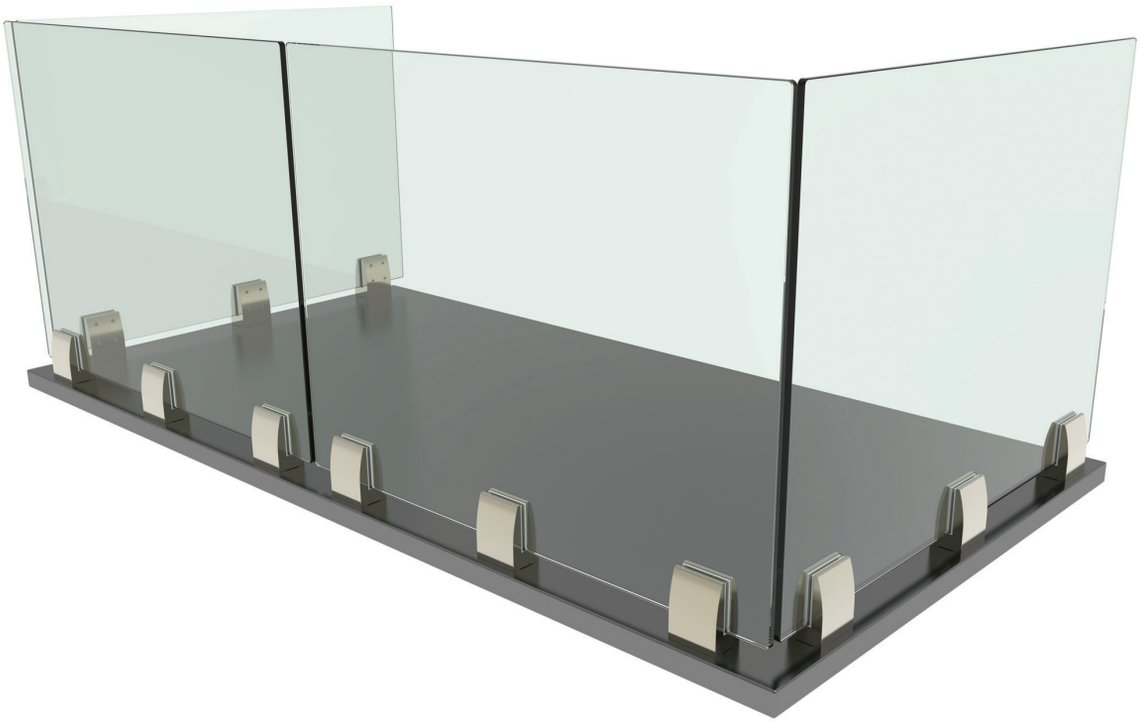

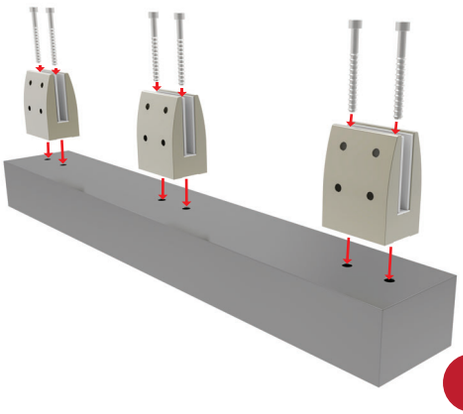

1

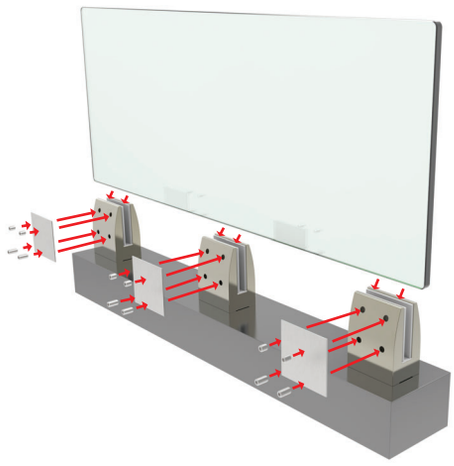

2

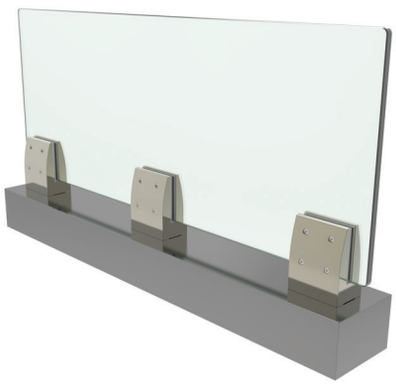

3

GS-07/D

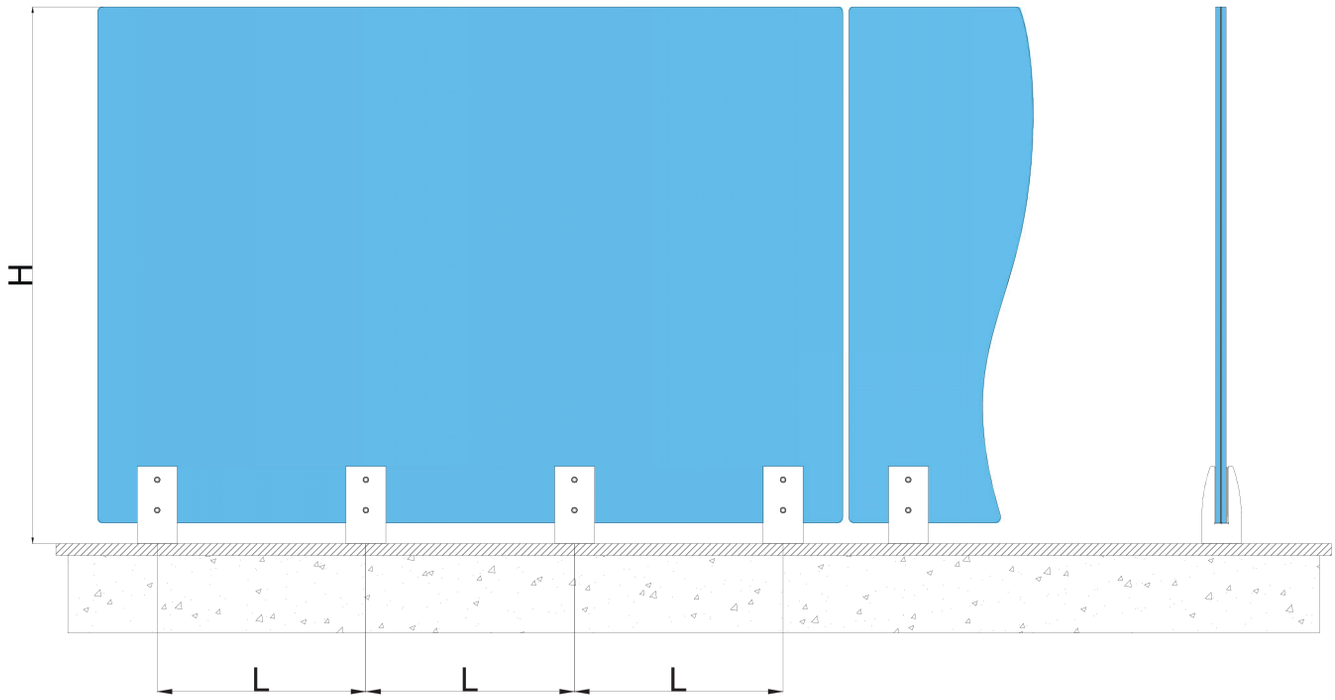

Cam Yüksekliği/H Glass Height/H Hauteur Verre/H Altura De Vidrio/H	Kalınlık (mm) Thickness (mm) Epaisseur (mm) Espesor (mm)	L	(kN)	(J)
0-599 mm	(6+1,52+6),(8+1,52+8)	700 mm	-	-
600-899 mm	(6+1,52+6),(8+1,52+8)	600 mm	-	-
900-1099 mm	(6+1,52+6),(8+1,52+8)	500 mm	-	-
1100-1200 mm	(6+1,52+6),(8+1,52+8)	400 mm	-	-

GS-08

MC-202

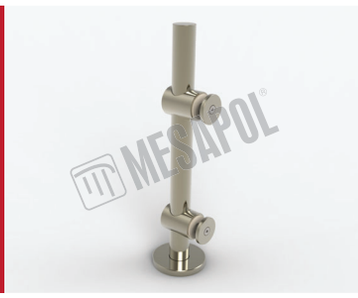

Çiftli spider cam ayağı (10 - 16 mm)
Round double shortleg glass holder (10 - 16 mm)
Patte rond support de verre double point (10 - 16 mm)
Soporte de vidrio con dos botones redondo (10 - 16 mm)

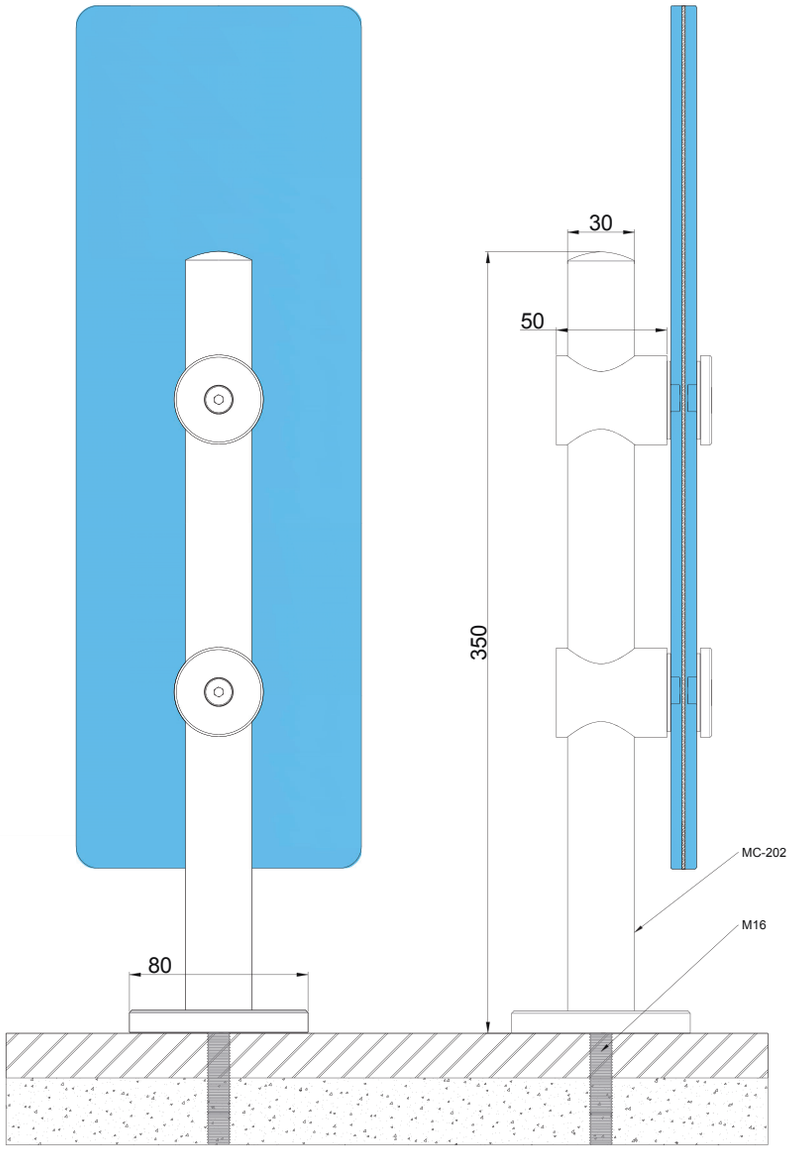

GS-08

Tested

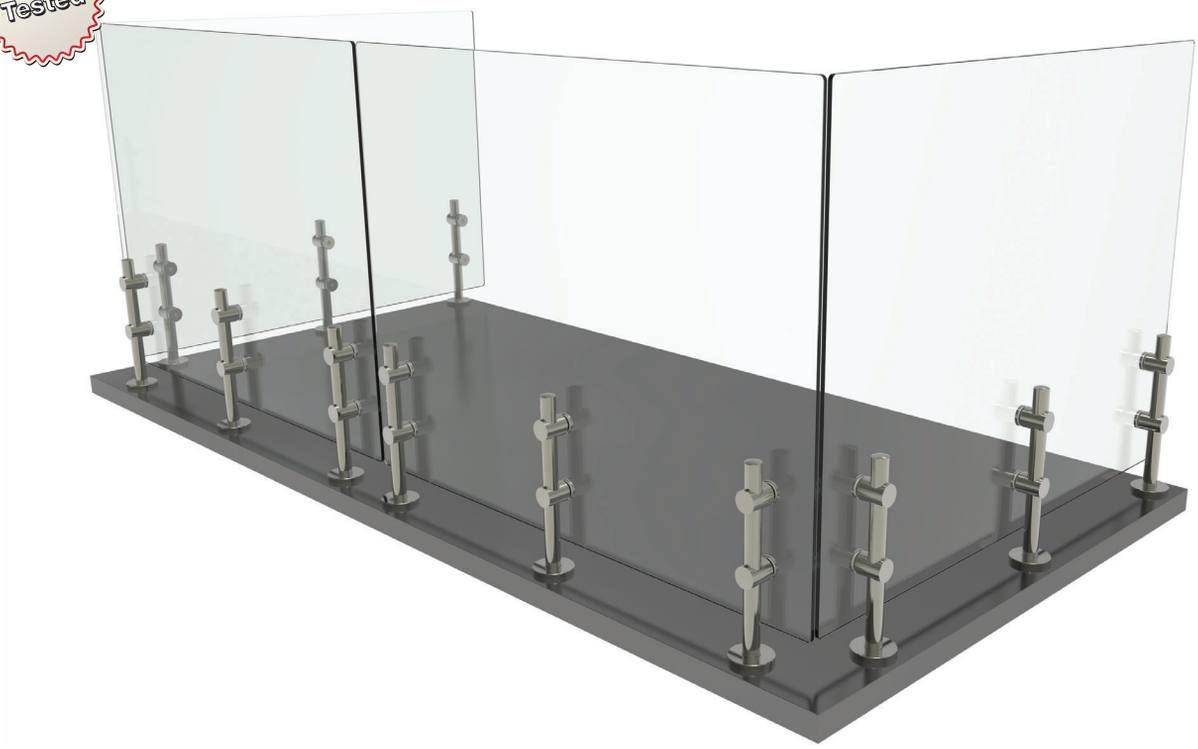

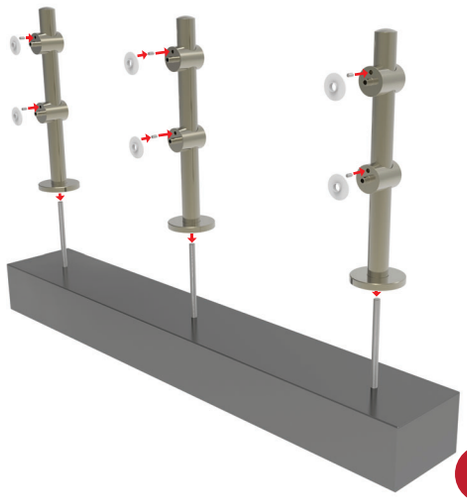

1

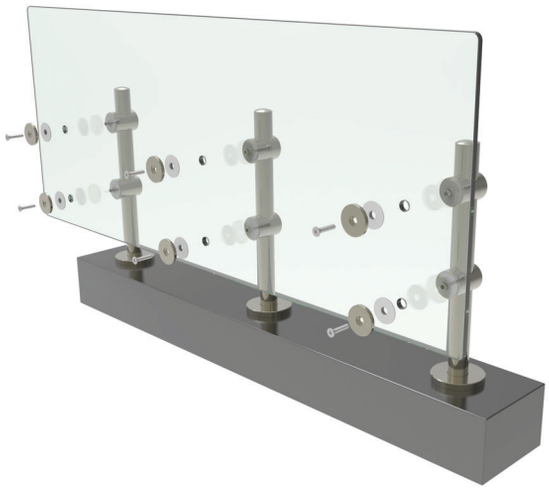

2

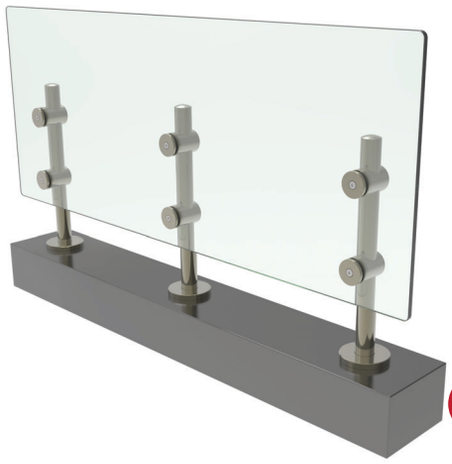

3

GS-08

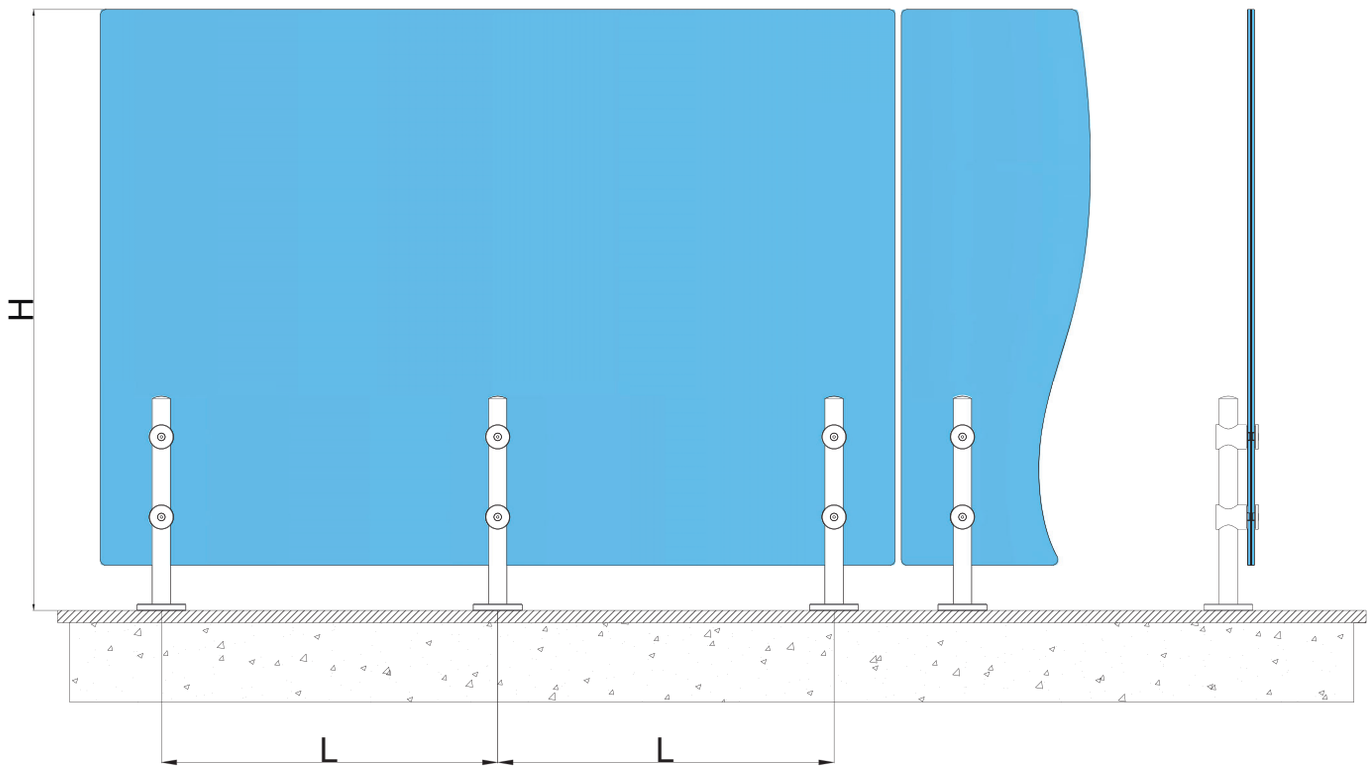

Cam Yüksekliği/H Glass Height/H Hauteur Verre/H Altura De Vidrio/H	Kalınlık (mm) Thickness (mm) Epaisseur (mm) Espesor (mm)	L	(kN)	(J)
0-599 mm	(5+1,52+5),(6+1,52+6)	850 mm	-	-
	(8+1,52+8)	750 mm	-	-
600-899 mm	(5+1,52+5),(6+1,52+6)	750 mm	-	-
	(8+1,52+8)	650 mm	-	-
900-1099 mm	(5+1,52+5),(6+1,52+6)	500 mm	-	-
	(8+1,52+8)	550 mm	-	-
1100-1200 mm	(5+1,52+5),(6+1,52+6)	500 mm	-	-
	(8+1,52+8)	400 mm	1,5	600

*Bina yüksekliğine göre kullanılacak cam kalınlığı ve ürün aralığı değişkenlik gösterebilir.
*Depending on the building's height the measurements and standards may change
*Les épaisseurs de verre et les entraxe peuvent varier selon la hauteur du batiment.
*Dependiendo de la altura del edificio, las medidas y las estandares pueden cambiar

GS-08/A

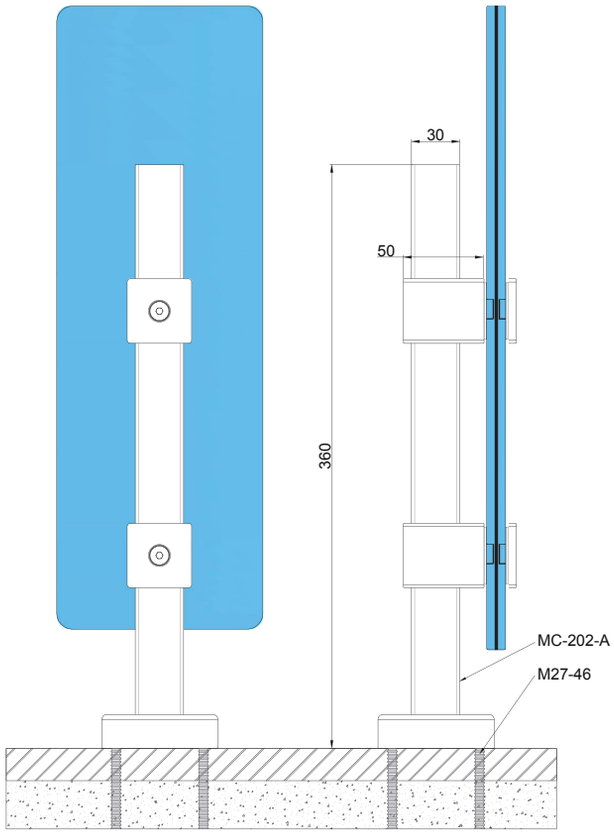

MC-202/A

Çiftli Spider Cam Ayağı Kare (10-16 mm)
Square Double Shortleg Glass Holder (10-16 mm)
Support De Verre Carré Double Point (10-16 mm)
Soporte De Vidrio Con Dos Botones Cuadrados (10-16 mm)

M27-45

7,5*120 Buldex Vida (Torx)
7,5*120 Buildex Torx Screw
7,5*120 Vis Buldex
7,5*120 Tornillo Torx Buildex

M27-45/A

7,5*100 Buldex Vida (Torx)
7,5*100 Buildex Torx Screw
7,5*100 Vis Buldex
7,5*100 Tornillo Torx Buildex

M27-46

7,5*150 Buldex Vida (Torx)
7,5*150 Buildex Torx Screw
7,5*150 Vis Buldex
7,5*150 Tornillo Torx Buildex

M27-46/A

7,5 Plastik Dübel
7,5 Plastic Anchor
Cheville En Plastique 7,5
7,5 Ancla Plástico

GS-08/A

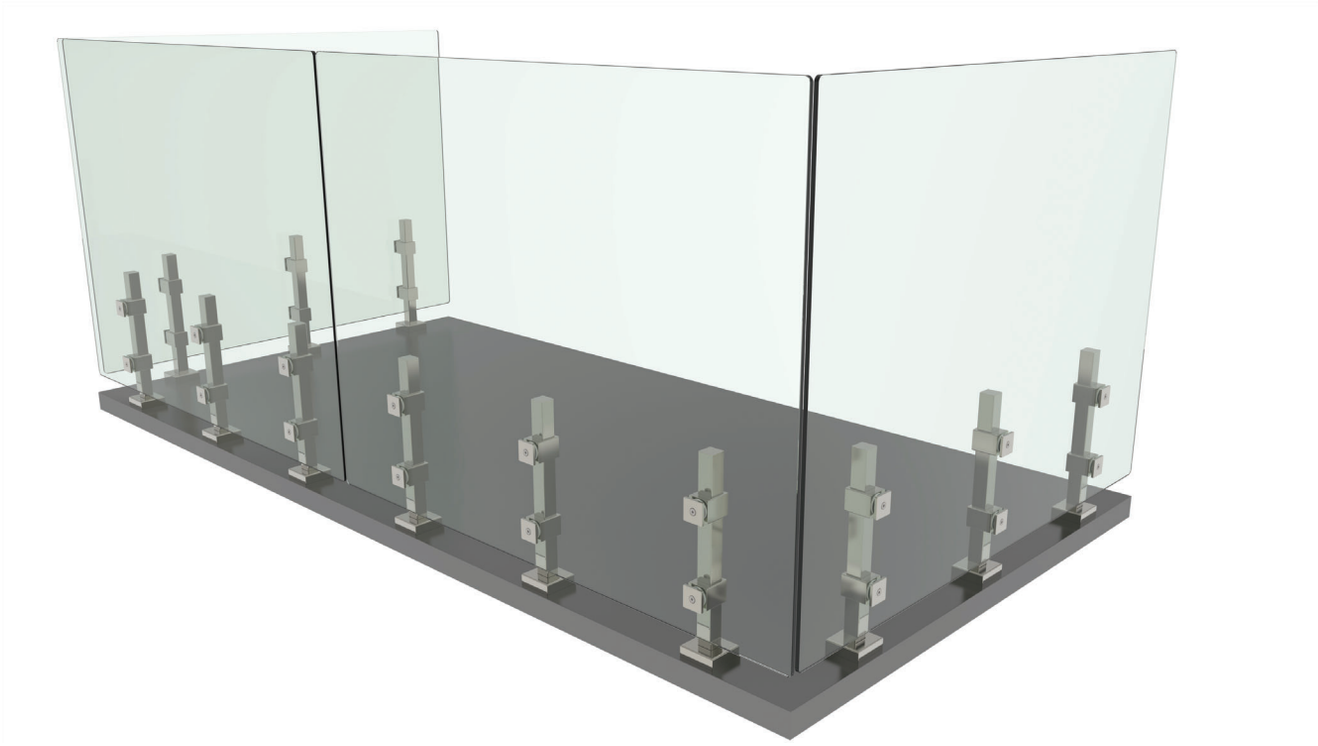

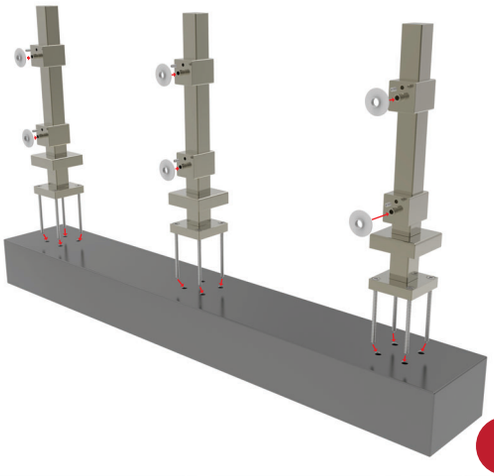

1

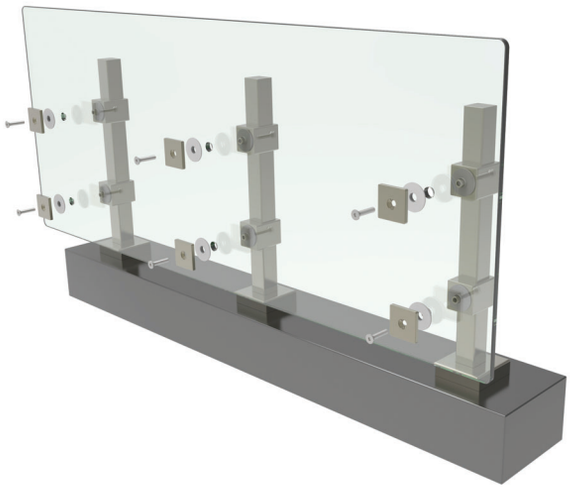

2

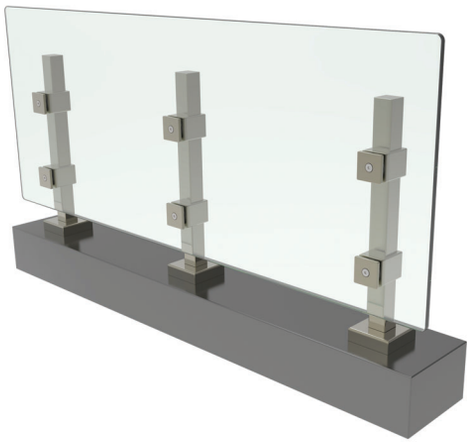

3

GS-08/A

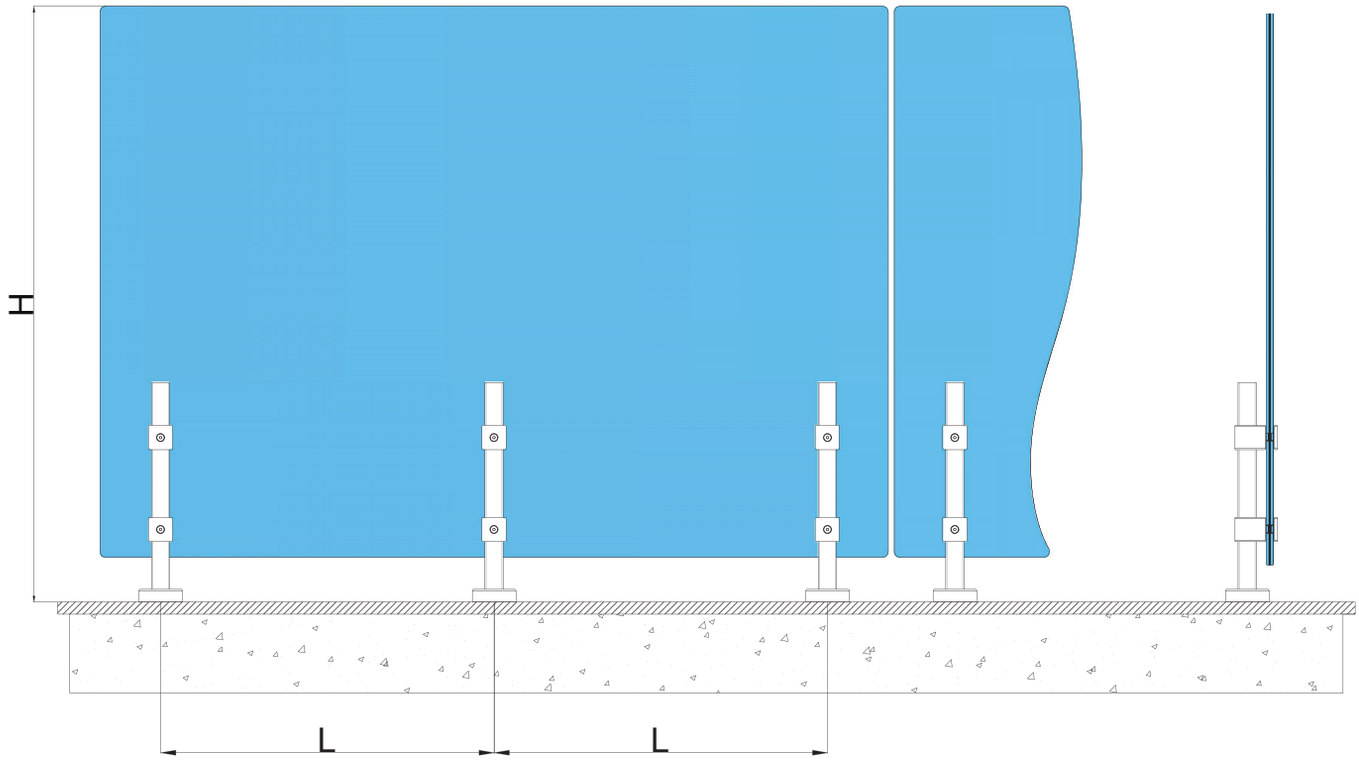

Cam Yüksekliği/H Glass Height/H Hauteur Verre/H Altura De Vidrio/H	Kalınlık (mm) Thickness (mm) Epaisseur (mm) Espesor (mm)	L	(kN)	(J)
0-599 mm	(5+1,52+5),(6+1,52+6)	700 mm	-	-
	(8+1,52+8)	600 mm	-	-
600-899 mm	(5+1,52+5),(6+1,52+6)	650 mm	-	-
	(8+1,52+8)	550 mm	-	-
900-1099 mm	(5+1,52+5),(6+1,52+6)	600 mm	-	-
	(8+1,52+8)	500 mm	-	-
1100-1200 mm	(5+1,52+5),(6+1,52+6)	500 mm	-	-
	(8+1,52+8)	400 mm	-	-

*Bina yüksekliğine göre kullanılacak cam kalınlığı ve ürün aralığı değişkenlik gösterebilir.
*Depending on the building's height the measurements and standards may change
*Les épaisseurs de verre et les entraxe peuvent varier selon la hauteur du batiment.
*Dependiendo de la altura del edificio, las medidas y las estandares pueden cambiar

GS-09

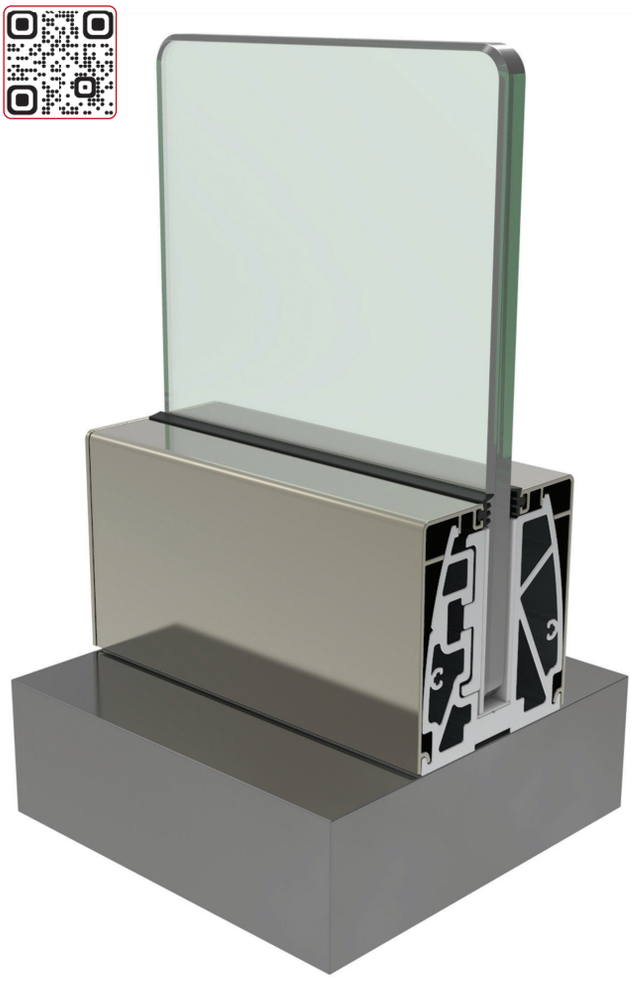

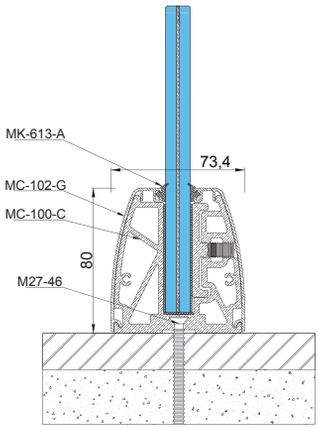
MK-613-A
73,4
MC-102-G
MC-100-C
80
M27-46

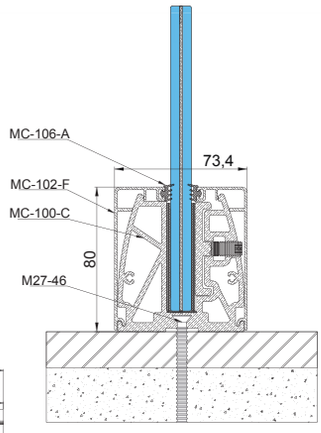
MC-106-A
73,4
MC-102-F
MC-100-C
80
M27-46

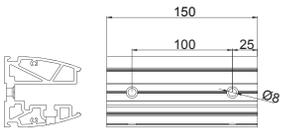
150
100
25
Ø8

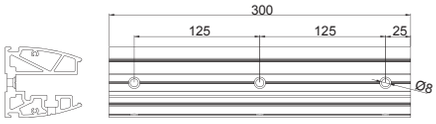
300
125
125
25
Ø8

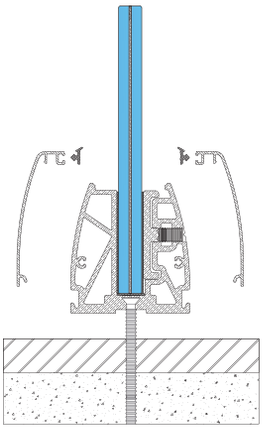

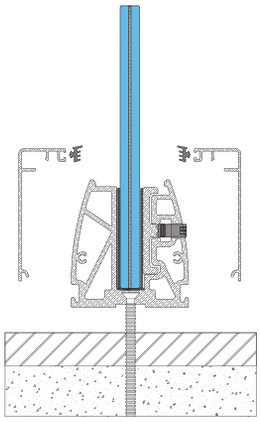

GS-09

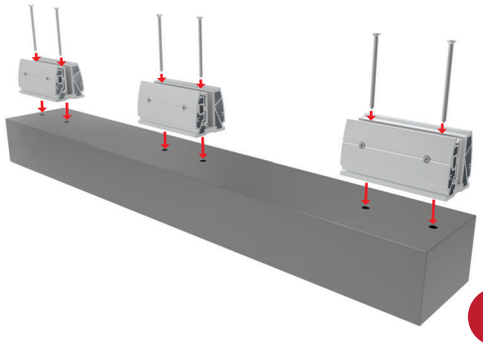

1

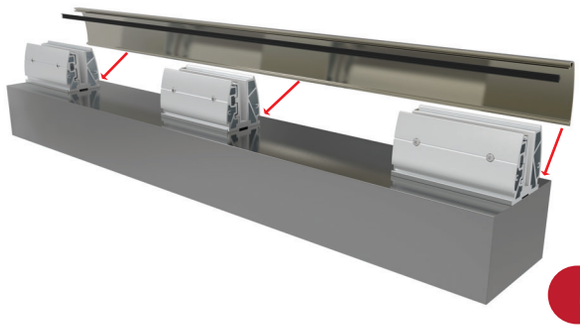

2

3

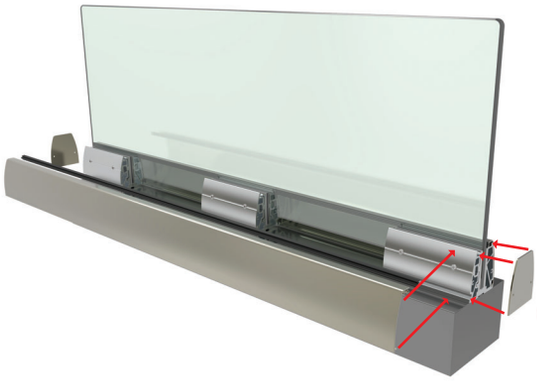

4

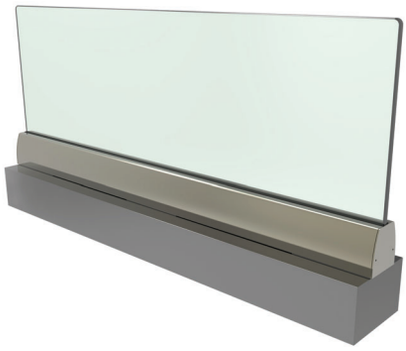

5

GS-09

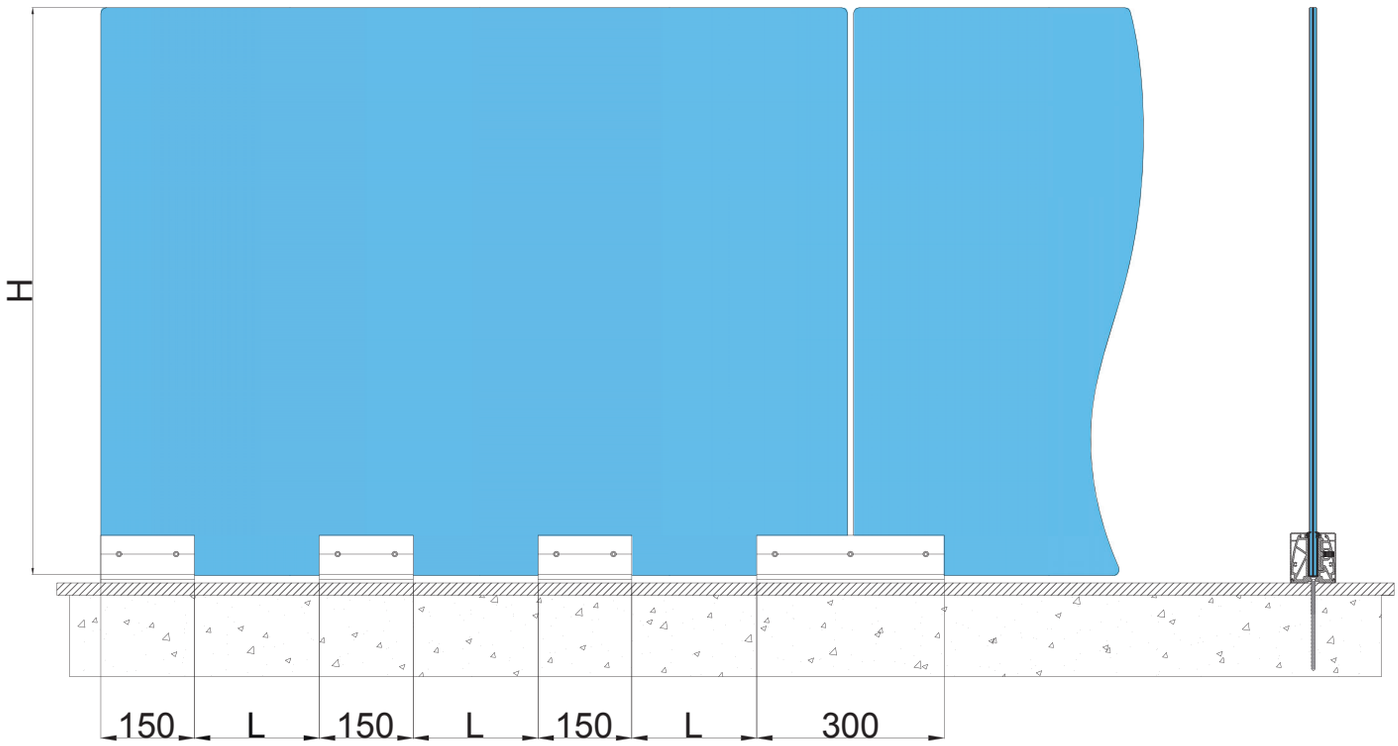

Cam Yüksekliği/H Glass Height/H Hauteur Verre/H Altura De Vidrio/H	Kalınlık (mm) Thickness (mm) Epaisseur (mm) Espesor (mm)	L	(kN)	(J)
0-599 mm	(5+1,52+5),(6+1,52+6)	400 mm	-	-
600-899 mm	(5+1,52+5),(6+1,52+6)	350 mm	-	-
900-1099 mm	(5+1,52+5),(6+1,52+6)	250 mm	-	-
1100-1200 mm	(5+1,52+5),(6+1,52+6)	200 mm	-	-
*Bina yüksekliğine göre kullanılacak cam kalınlığı ve ürün aralığı değişkenlik gösterebilir. *Depending on the building's height the measurements and standards may change *Les épaisseurs de verre et les entraxe peuvent varier selon la hauteur du batiment. *Dependiendo de la altura del edificio, las medidas y las estandares pueden cambiar				

MC-100/C

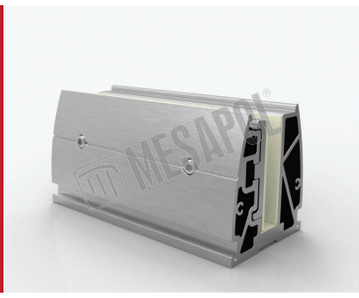

Cam Yatağı Takımı 15 cm (10 -12 mm Cam)

Base Profile Set 15 cm (10 -12 mm Glass Thickness)

Profil De Sol 15 cm Sur Dalle (Verre 10-12 mm)

Base Perfil 15 cm (10 -12 mm Vidrio)
(Con Cuña Y Plástica Para Apretar el Vidrio)

MC-101/C

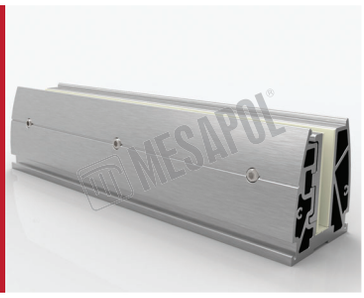

Cam Yatağı Takımı 30 cm (10 -12 mm Cam)

Base Profile Set 30 cm (10 -12 mm Glass Thickness)

Profil De Sol 30 cm Sur Dalle (Verre 10-12 mm)

Base Perfil 30 cm (10 -12 mm Vidrio)
(Con Cuña Y Plástica Para Apretar el Vidrio)

MC-102/F

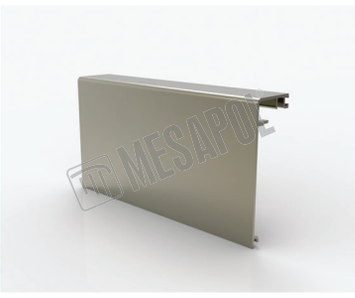

Cam Yatağı Kapağı Küçük Düz (3,30 kg / 6 mt)

Square Small Straight Base Profile Cover (3,30 kg/6 mt)

Enjoliveur Droit Profil De Sol (3,30 kg / 6 mt)

Perfil Para Tapa Lateral Cuadrado (3,30 kg / 6 mt)

MC-102/G

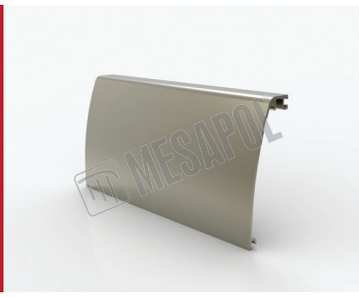

Cam Yatağı Kapağı Küçük Elips (2,80 kg / 6 mt)

Ellipse Small Base Profile Cover (2,80 kg / 6 mt)

Enjoliveur Ovale Profil De Sol (2,80 kg / 6 mt)

Perfil Para Tapa Lateral Elipse (2,80 kg / 6 mt)

MC-106/A

10 mm Cam Fitili (1 mt)

10 mm Glass Gasket (1 mt)

10 mm Joint D'enjoliveur Pour Verre (1 mt)

10 mm Goma de Vidrio (1 mt)

MK-613/A

12 mm Cam Fitili Dış (1 mt)

12 mm External Glass Gasket (1 mt)

12 mm Joint De Vitrage Extérieur (1 mt)

12 mm Goma De Vidrio Externa (1 mt)

MC-109/B

Cam Yatağı Kapağı Küçük Düz Tapası

Small Square Base Profile Plug

Embout De Finiton Pour Profil De Sol

Tapa Final

MC-109/C

Cam Yatağı Kapağı Küçük Elips Tapası

Small Ellipse Base Profile Plug

Embout De Finiton Ovale Pour Profil De Sol

Tapa Final Elipse

M27-45/A

7,5*100 Buldex Vida (Torx)

7,5*100 Buildex Torx Screw

7,5*100 Vis Buldex

7,5*100 Tornillo Torx Buildex

M27-45

7,5*120 Buldex Vida (Torx)

7,5*120 Buildex Torx Screw

7,5*120 Vis Buldex

7,5*120 Tornillo Torx Buildex

M27-46

7,5*150 Buldex Vida (Torx)

7,5*150 Buildex Torx Screw

7,5*150 Vis Buldex

7,5*150 Tornillo Torx Buildex

M27-46/A

7,5 Plastik Dübel

7,5 Plastic Anchor

Cheville En Plastique 7,5

7,5 Ancla Plástico

GS-09/L

Tested

Tested

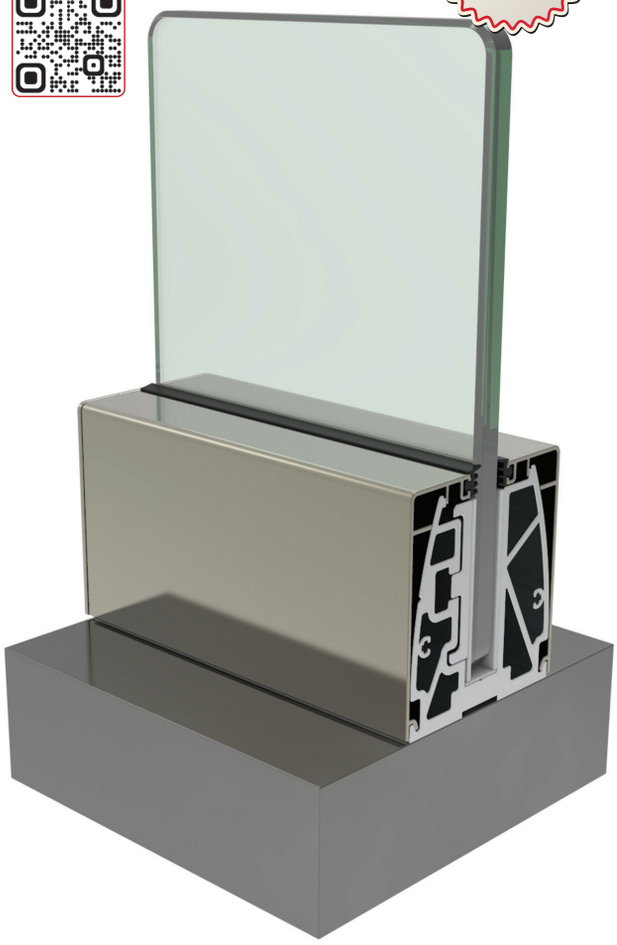

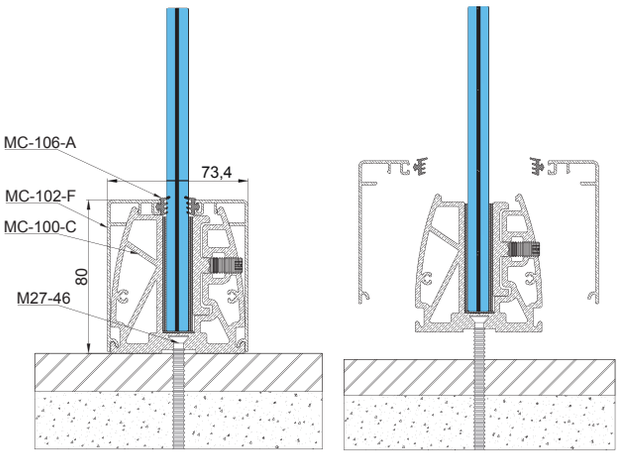

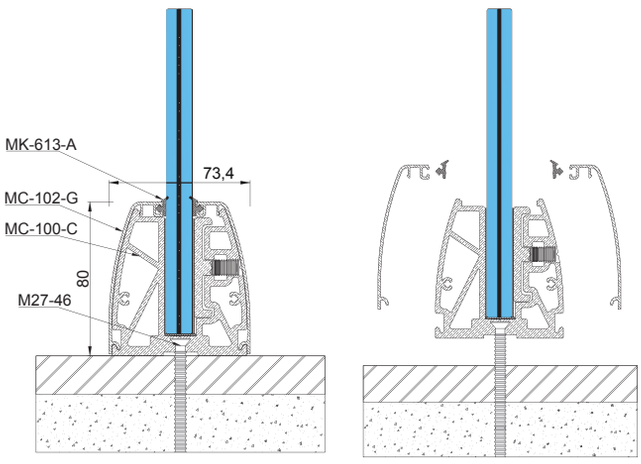

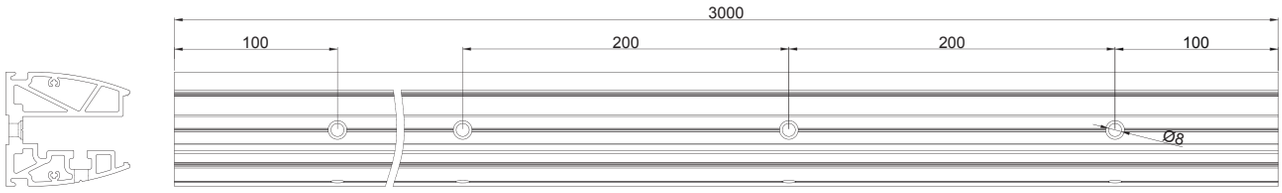

GS-09/L

Tested

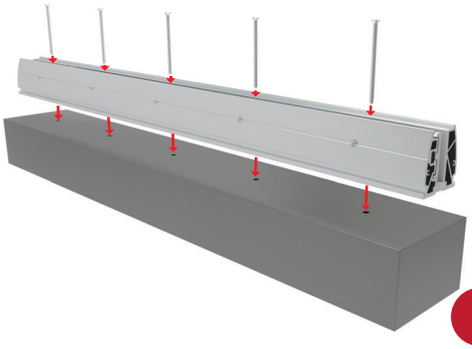

1

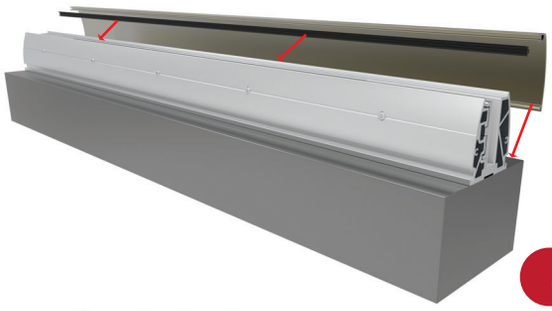

2

3

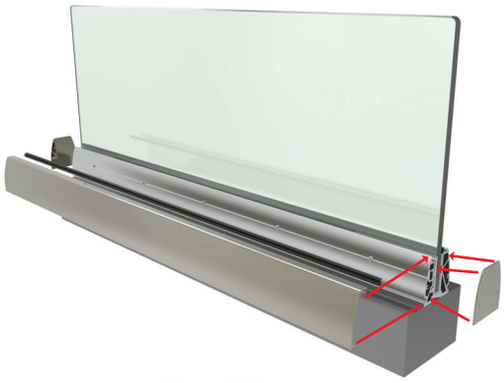

4

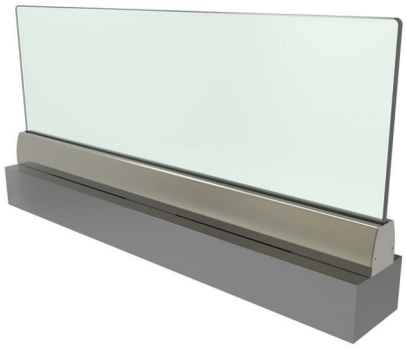

5

GS-09/L

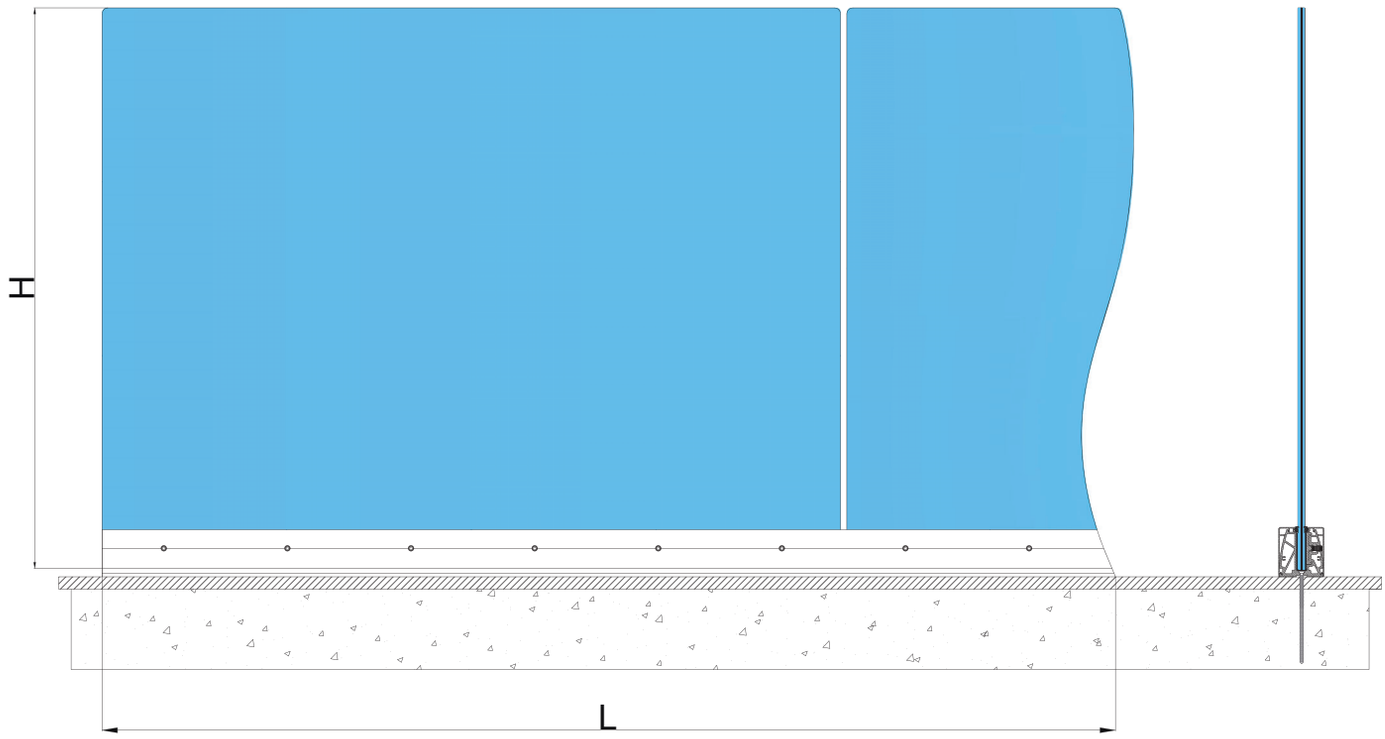

Cam Yüksekliği/H Glass Height/H Hauteur Verre/H Altura De Vidrio/H	Kalınlık (mm) Thickness (mm) Epaisseur (mm) Espesor (mm)	L	(kN)	(J)
0-1200 mm	(5+1,52+5)**,(6+1,52+6)**	3000 mm	3,5	600

MC-100/C/L

Cam Yatağı Takımı 300 cm (10 -12 mm Cam)
Base Profile Set 300 cm (10-12 mm Glass Thichness)
Profil De Sol 300 cm Sur Dalle (Verre 10-12 mm)
Base perfil 300 cm (10 -12 mm Vidrio) (Con Cuña y Parte Plástica Para Apretar el Vidrio)

MC-102/F

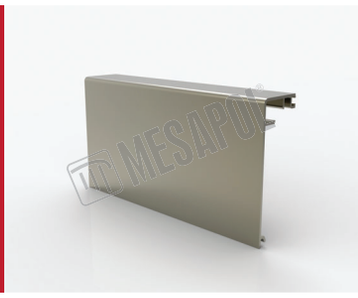

Cam Yatağı Kapağı Küçük Düz (3,30 kg / 6 mt)
Square Small Straight Base Profile Cover (3,30 kg/6 mt)
Enjoliveur Droit Profil De Sol (3,30 kg / 6 mt)
Perfil Para Tapa Lateral Cuadrado (3,30 kg / 6 mt)

MC-102/G

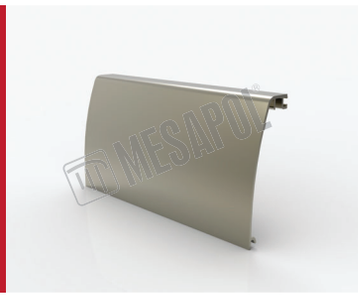

Cam Yatağı Kapağı Küçük Elips (2,80 kg / 6 mt)
Ellipse Small Base Profile Cover (2,80 kg / 6 mt)
Enjoliveur Ovale Profil De Sol (2,80 kg / 6 mt)
Perfil Para Tapa Lateral Elipse (2,80 kg / 6 mt)

MC-106/A

10 mm Cam Fitili (1 mt)
10 mm Glass Gasket (1 mt)
10 mm Joint D'enjoliveur Pour Verre (1 mt)
10 mm Goma de Vidrio (1 mt)

MK-613/A

12 mm Cam Fitili Dış (1 mt)
12 mm External Glass Gasket (1 mt)
12 mm Joint De Vitrage Extérieur (1 mt)
12 mm Goma De Vidrio Externa (1 mt)

MC-109/B

Cam Yatağı Kapağı Küçük Düz Tapası
Small Square Base Profile Plug
Embout De Finiton Pour Profil De Sol
Tapa Final

MC-109/C

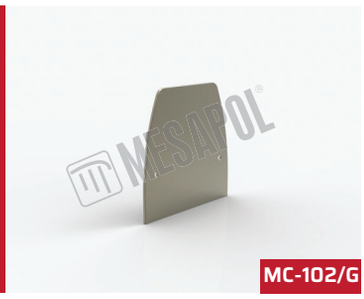

Cam Yatağı Kapağı Küçük Elips Tapası
Small Ellipse Base Profile Plug
Embout De Finiton Ovale Pour Profil De Sol
Tapa Final Elipse

M27-45

7,5*120 Buldex Vida (Torx)
7,5*120 Buildex Torx Screw
7,5*120 Vis Buldex
7,5*120 Tornillo Torx Buildex

M27-45/A

7,5*100 Buldex Vida (Torx)
7,5*100 Buildex Torx Screw
7,5*100 Vis Buldex
7,5*100 Tornillo Torx Buildex

M27-46

7,5*150 Buldex Vida (Torx)
7,5*150 Buildex Torx Screw
7,5*150 Vis Buldex
7,5*150 Tornillo Torx Buildex

M27-46/A

7,5 Plastik Dübel
7,5 Plastic Anchor
Cheville En Plastique 7,5
7,5 Ancla Plástico

MC-609

4'lük Profil Birleştirme Pimi (30 mm)
4 mm Base Profile Interconnector (30 mm)
4 mm Pièce Connecteur Profil De Sol (30 mm)
4 mm Conector Perfil Base (30 mm)

GS-10

Tested

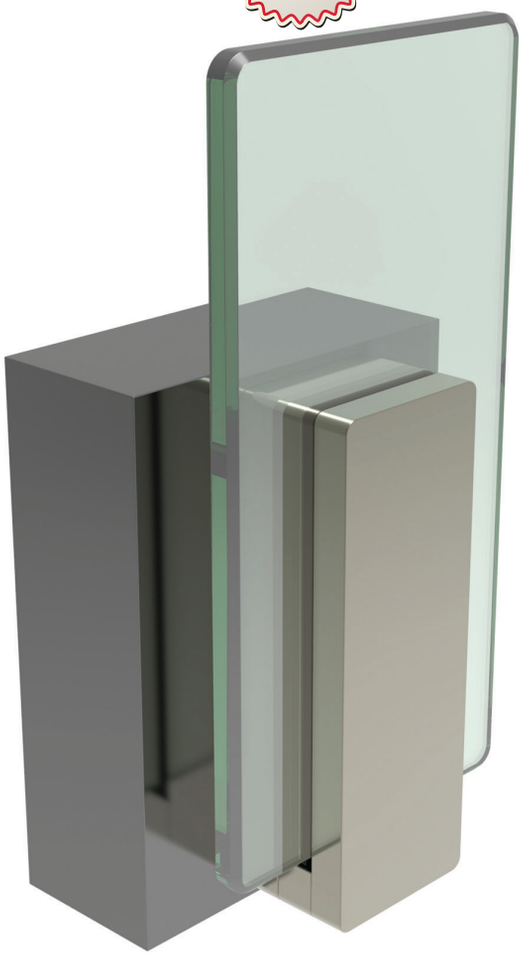

Yandan Düz Cam Tutamağı (10-20 mm)
Side Mounted Glass Holder (10-20 mm)
Pince / Adaptateur De Verre Fixation À L'anglaise(Verre 10-20 mm)
Pinza Lateral Para Vidrio (10-20 mm)

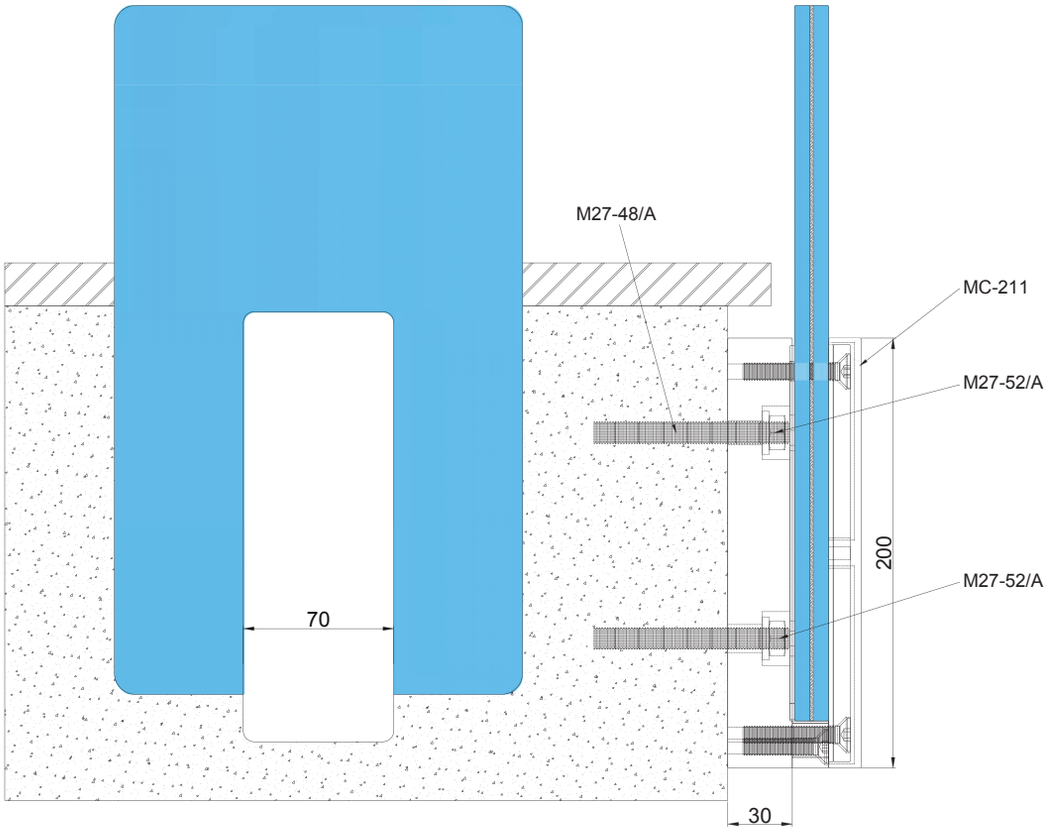

GS-10

Tested

GS-10

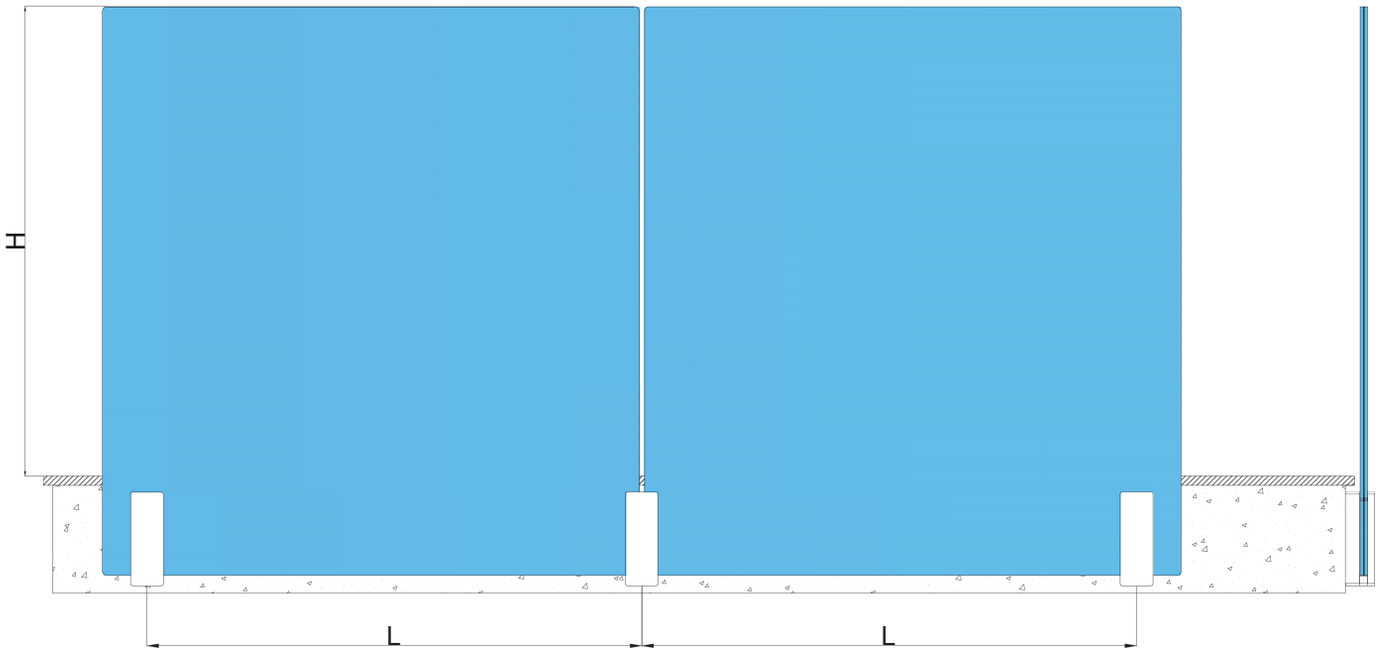

Cam Yüksekliği/H Glass Height/H Hauteur Verre/H Altura De Vidrio/H	Kalınlık (mm) Thickness (mm) Epaisseur (mm) Espesor (mm)	L	(kN)	(J)
0-599 mm	(5+1,52+5),(6+1,52+6)	1100 mm	-	-
	(8+1,52+8),(10+1,52+10)	1350 mm	-	-
600-899 mm	(5+1,52+5),(6+1,52+6)	1050 mm	-	-
	(8+1,52+8),(10+1,52+10)	1300 mm	-	-
900-1099 mm	(5+1,52+5),(6+1,52+6)	1000 mm	-	-
	(8+1,52+8),(10+1,52+10)	1250 mm	-	-
1100-1200 mm	(5+1,52+5),(6+1,52+6)	900 mm	-	-
	(10+1,52+10) extra strong	1200 mm	4,1	600
	(8+1,52+8) extra strong	1200 mm	3,8	600
	(10+1,52+10)	1200 mm	2,7	600

*Bina yüksekliğine göre kullanılacak cam kalınlığı ve ürün aralığı değişkenlik gösterebilir.
*Depending on the building's height the measurements and standards may change
*Les épaisseurs de verre et les entraxe peuvent varier selon la hauteur du batiment.
*Dependiendo de la altura del edificio, las medidas y las estandares pueden cambiar

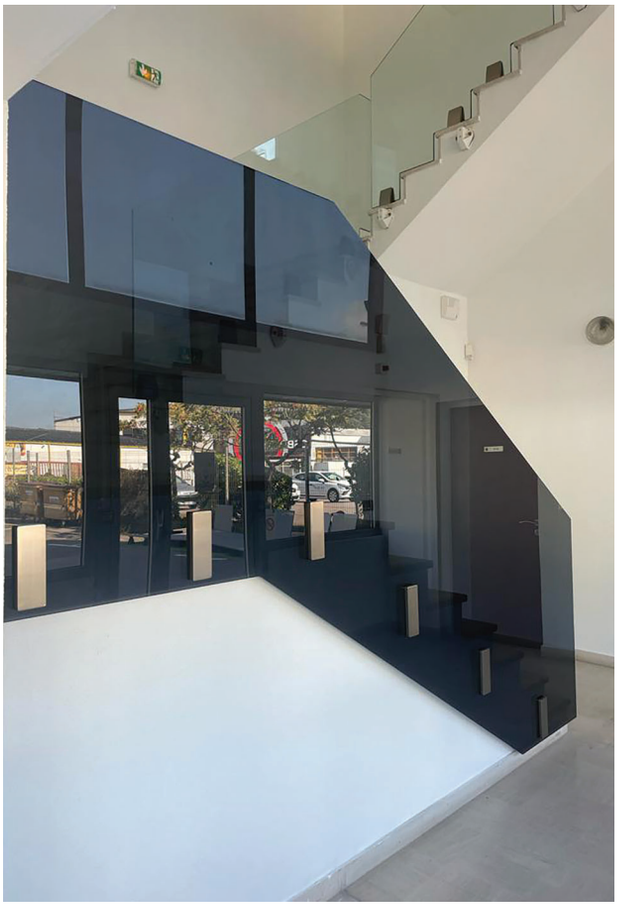

GS-11

Tested

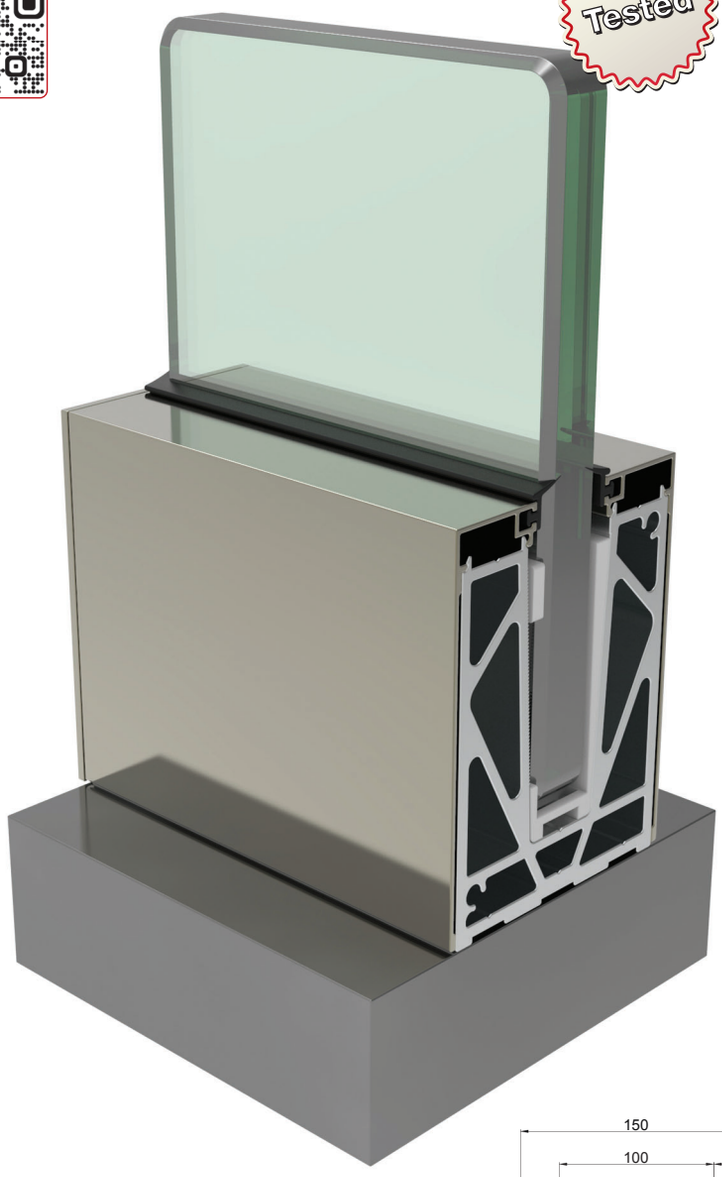

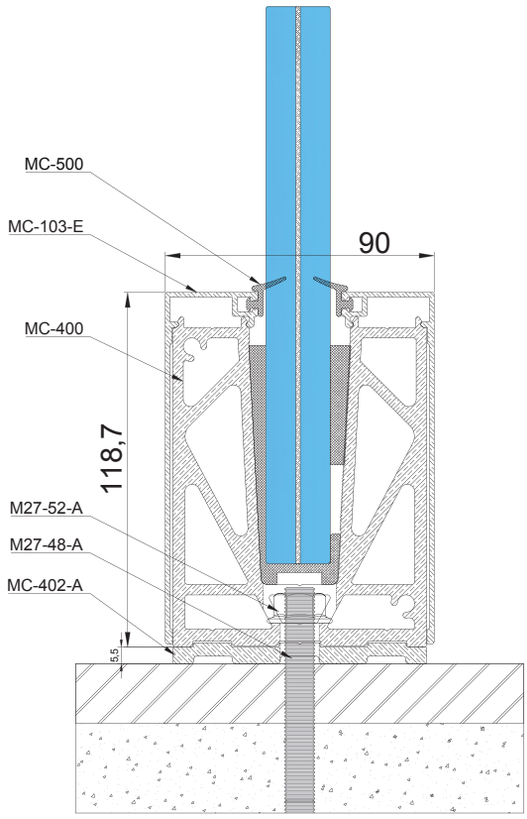
MC-500
MC-103-E
90
MC-400
118,7
M27-52-A
M27-48-A
MC-402-A
5,5

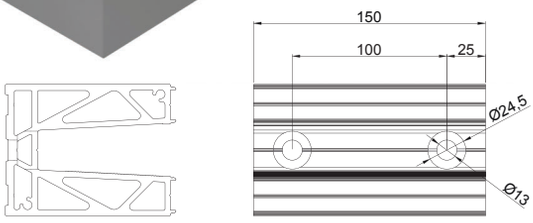
150
100
25
Ø24,5
Ø13

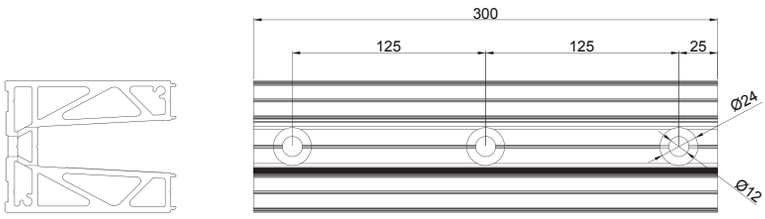
300
125
125
25
Ø24
Ø12

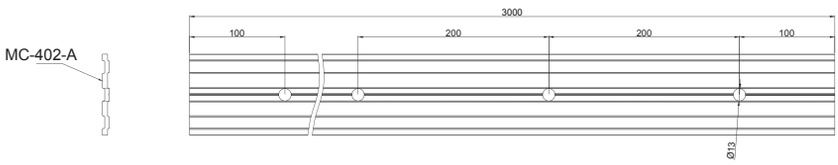
MC-402-A
3000
100
200
200
100
Ø13

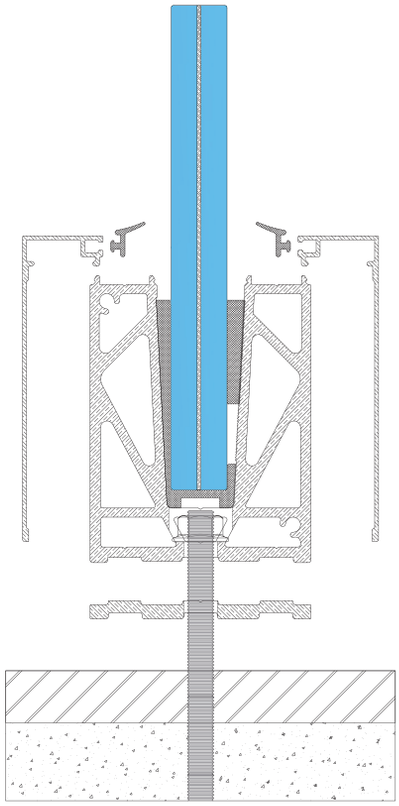

GS-11

Tested

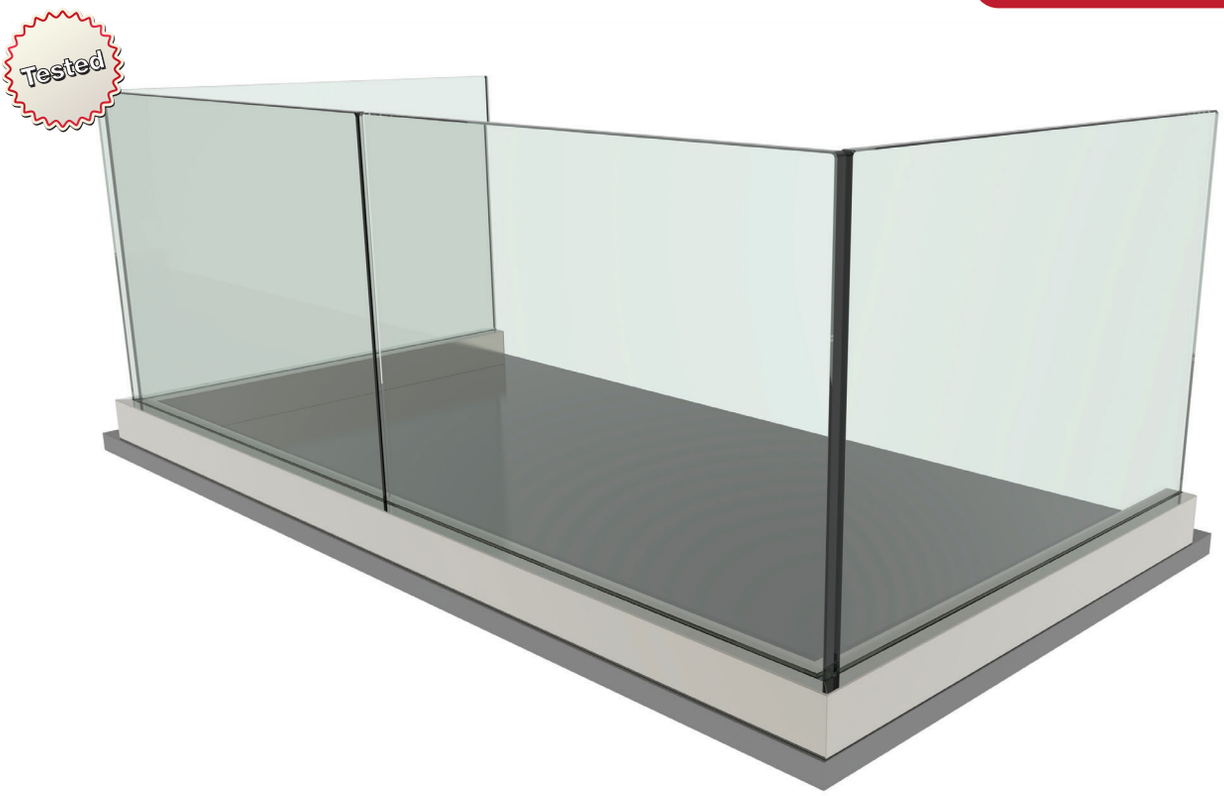

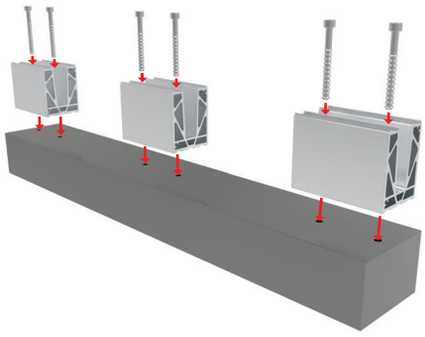

1

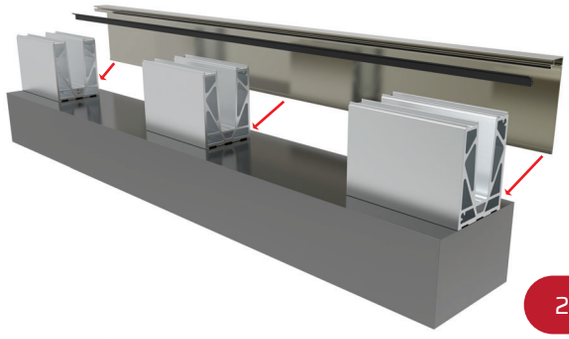

2

3

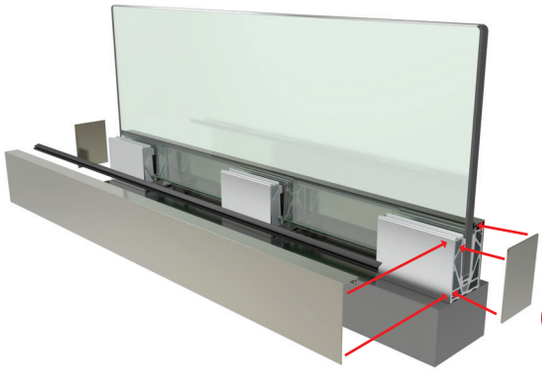

4

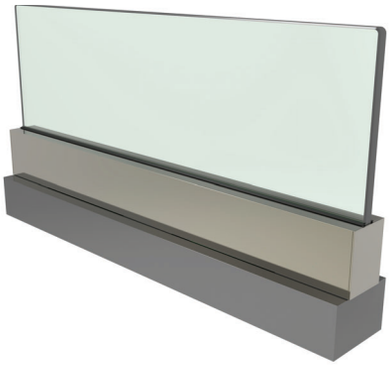

5

GS-11

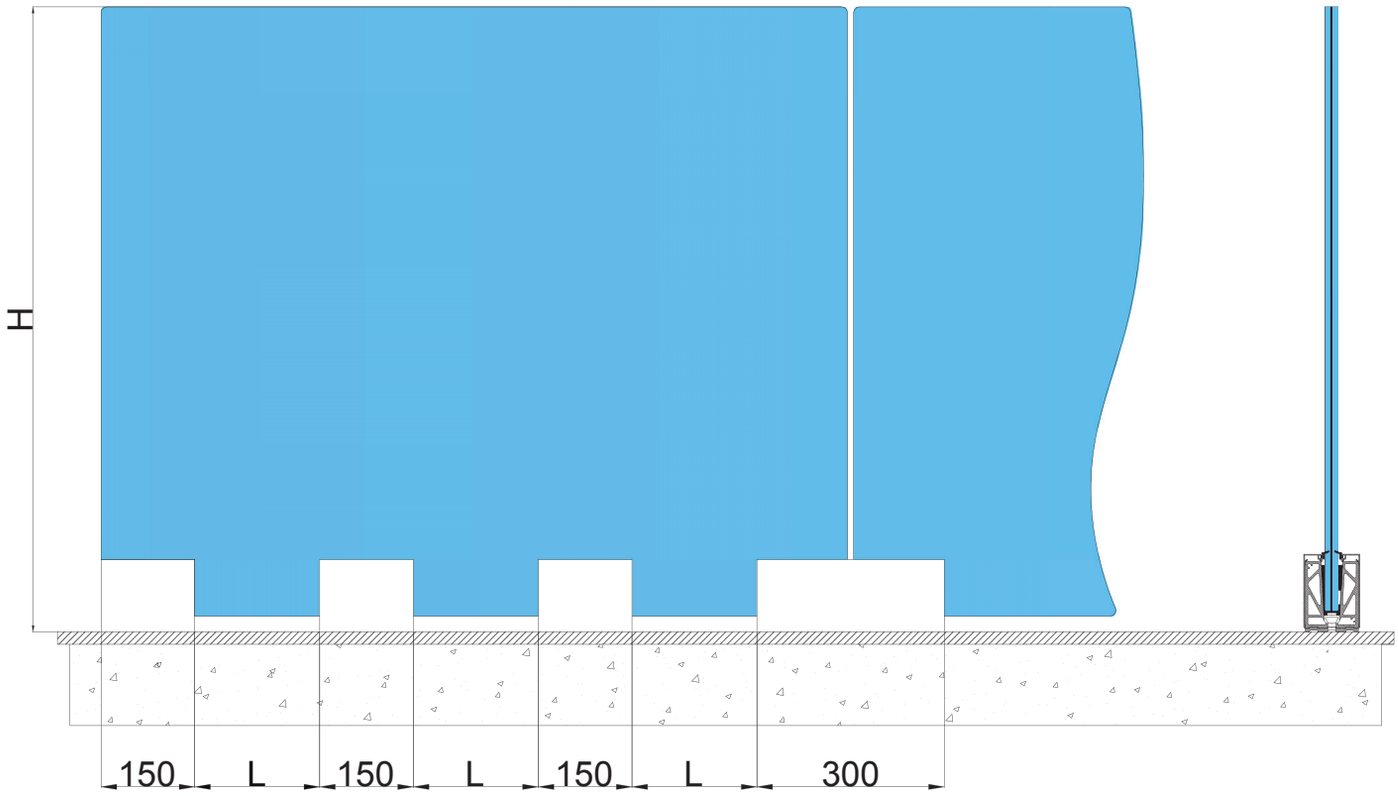

Cam Yüksekliği/H Glass Height/H Hauteur Verre/H Altura De Vidrio/H	Kalınlık (mm) Thickness (mm) Epaisseur (mm) Espesor (mm)	L	(kN)	(J)
0-599 mm	(8+1,52+8),(10+1,52+10)	500 mm	-	-
600-899 mm	(8+1,52+8),(10+1,52+10)	400 mm	-	-
900-1099 mm	(8+1,52+8),(10+1,52+10)	300 mm	-	-
1100-1200 mm	**(8+1,52+8)**,(10+1,52+10)	266 mm	3,6	600

*Bina yüksekliğine göre kullanılacak cam kalınlığı ve ürün aralığı değişkenlik gösterebilir.
*Depending on the building's height the measurements and standards may change
*Les épaisseurs de verre et les entraxe peuvent varier selon la hauteur du batiment.
*Dependiendo de la altura del edificio, las medidas y las estandares pueden cambiar

MC-400

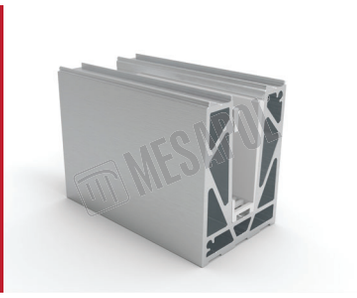

Cam Yatağı Takımı 15 cm (16 - 20 mm Cam)
Base Profile Set 15 cm (16-20 mm Glass Thickness)
Profil De Sol 15 cm (Sur Dalle) (Verre 16-20 mm)
Base Perfil 15 cm (16 -20 mm Vidrio) (Con Cuña Y Plástica Para Apretar el Vidrio)

MC-401

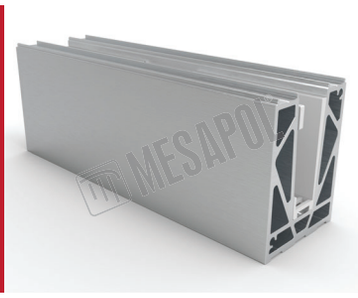

Cam Yatağı Takımı 30 cm (16 - 20 mm Cam)
Base Profile Set 30 cm (16 - 20 mm Glass Thickness)
Profil De Sol 30 cm (Sur Dalle) (Verre 16-20 mm)
Base Perfil 30 cm (16 -20 mm Vidrio) (Con Cuña Y Plástica Para Apretar el Vidrio)

MC-103/E

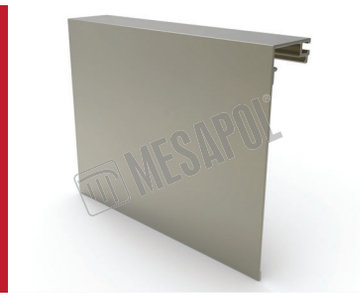

Cam Yatağı Kapağı (4,40 kg / 6 mt)
Base Profile Cover (4,40 kg / 6 mt)
Enjoliveur Profil De Sol (4,40 kg / 6 mt)
Perfil Lateral Para Bases (4,40 kg / 6 mt)

MC-500

10 - 12 - 16 - 20 mm Cam Fitili (1 mt)
10 - 12 - 16 - 20 mm Glass Gasket (1 mt)
10-12-16-20 mm Joint D'enjoliveur Pour Verre (1 mt)
10 - 12 - 16 - 20 mm Goma (1 mt)

MC-402/A

Cam Yatağı Drenaj Profili 300 cm - Büyük
Drainage Profile 300 cm - Big
Drainage Pour Profil De Sol 300 cm
Perfil De Drenaje 300 cm

MC-600

Cam Yatağı Tapası
Base Profile Plug
Embout De Finiton Pour Profil De Sol
Tapa Final

M27-48/A

M10 Tijli Çubuk 15 cm
M10 Rod 15 cm
M10 Tige Fileté 15 cm
M10 Barra 15 cm

M27-52

M10 Pul
M10 Washer
Rondelle M10
M10 Arandela

M27-52/A

M10 Flanşlı Somun
M10 Nut And Washer
Ecrou Avec Rondelle M10
M10 Tuerca Con Arandela

M27-57

M10*150 Beton Vidası - Multi Monti
M10*150 Concrete Screw - Multi Monti
Vis Béton M10×150
M10*150 Tornillo Para Hormigón - Multi Monti

GS-11/L

Tested

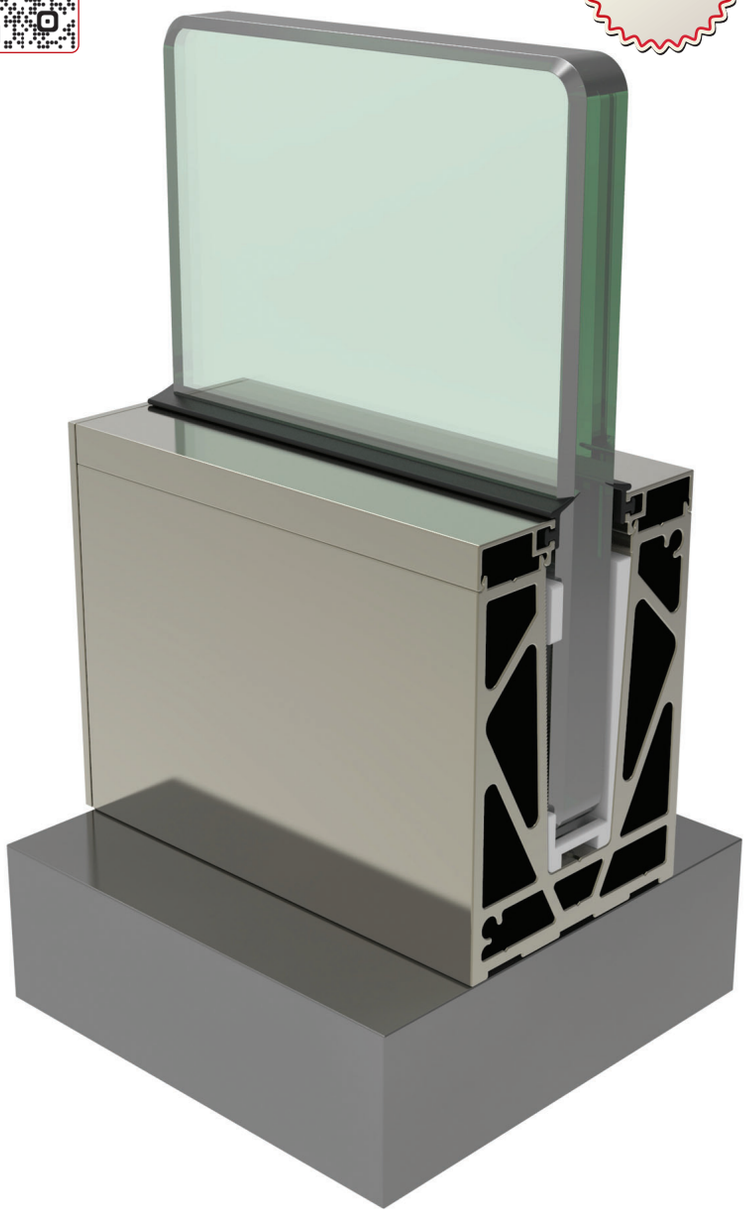

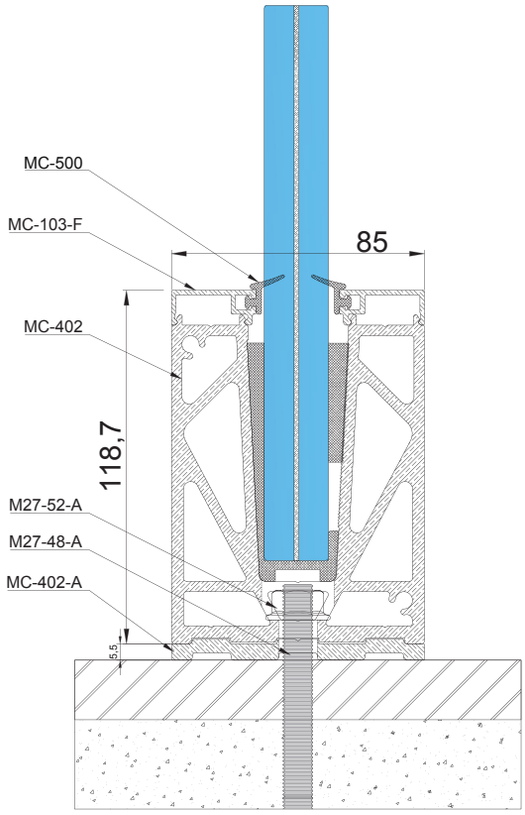

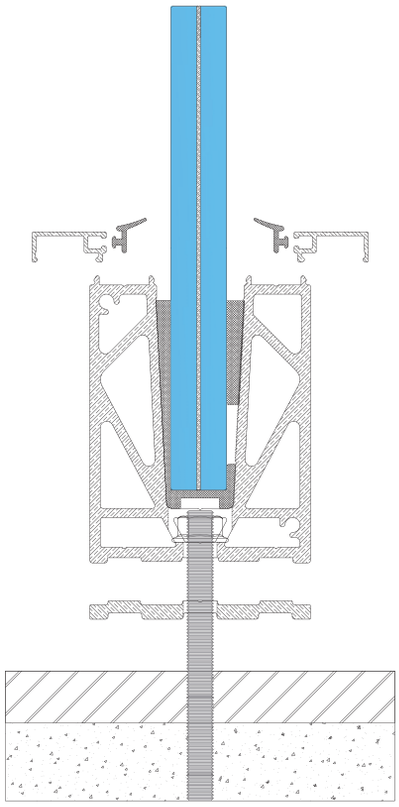

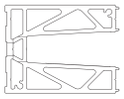

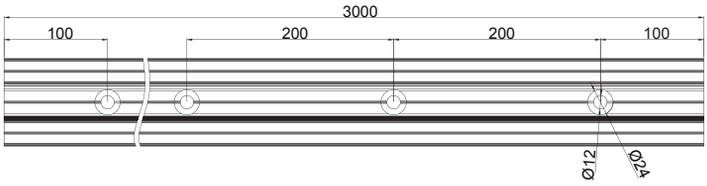

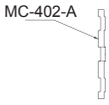

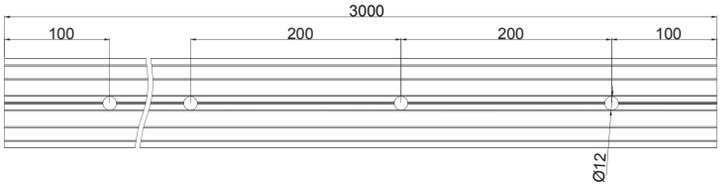

GS-11/L

Tested

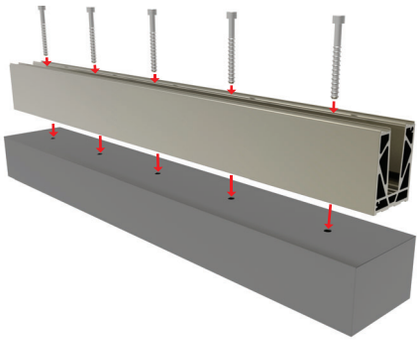

1

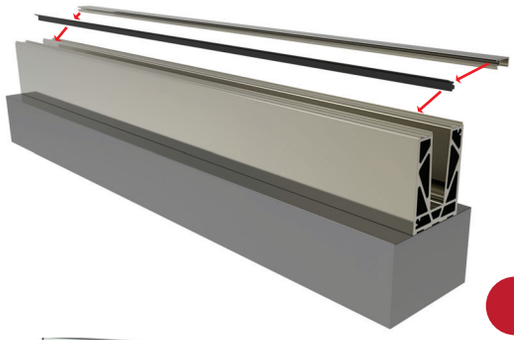

2

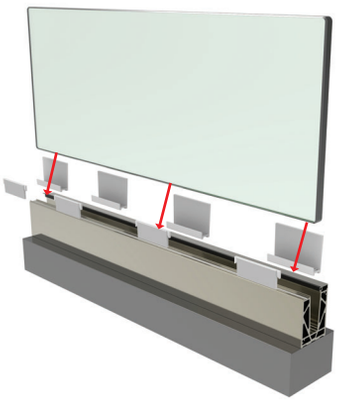

3

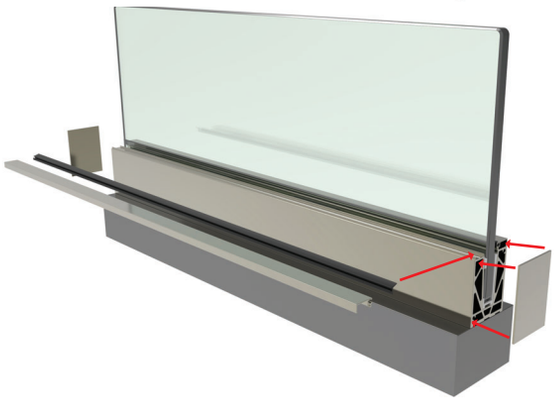

4

5

GS-11/L

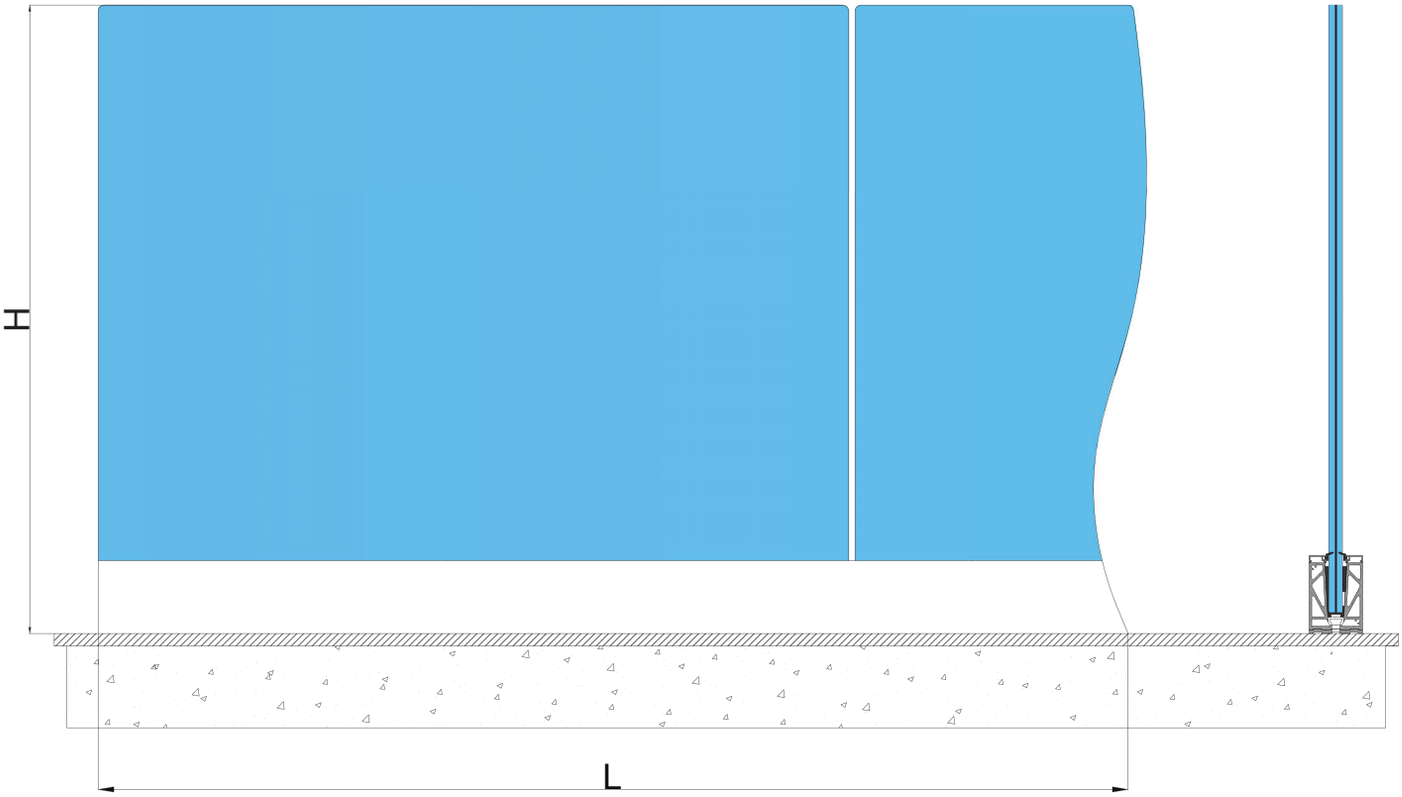

Cam Yüksekliği/H Glass Height/H Hauteur Verre/H Altura De Vidrio/H	Kalınlık (mm) Thickness (mm) Epaisseur (mm) Espesor (mm)	L	(kN)	(J)
0-1200 mm	**(8+1,52+8)**,(10+1,52+10)	3000 mm	8,9	600

MC-402

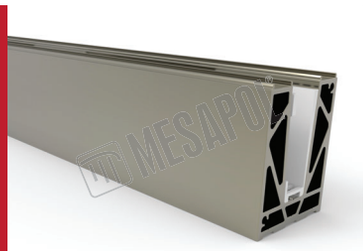

Cam yatağı takımı 300 cm (16 - 20 mm cam)
Base profile set 300 cm (16-20 mm glass thickness)
Profil de sol 300 cm (verre 16-20 mm)
Base Perfil 300 cm (16 -20 mm Vidrio) (Con Cuña Y Parte Plástica Para Apretar El Vidrio)

MC-103/F

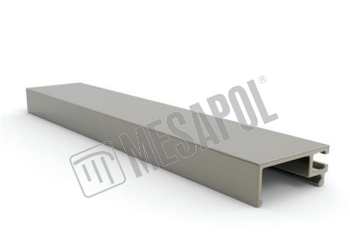

Cam Yatağı Kapağı (1,50 kg / 6 mt)
Base Profile Cover (1,50 kg / 6 mt)
Enjoliveur Droit Profil De Sol (1,50 kg / 6 mt)
Perfil Tapa Superior Para Bases (1,50 kg / 6 mt)

MC-500

10 - 12 - 16 - 20 mm Cam Fitili (1 mt)
10 - 12 - 16 - 20 mm Glass Gasket (1 mt)
10-12-16-20 mm Joint D'enjoliveur Pour Verre (1 mt)
10 - 12 - 16 - 20 mm Goma (1 mt)

MC-402/A

Cam Yatağı Drenaj Profili 300 cm - Büyük
Drainage Profile 300 cm - Big
Drainage Pour Profil De Sol 300 cm
Perfil De Drenaje 300 cm

MC-601

Cam Yatağı Tapası
Base Profile Plug
Embout De Finiton Pour Profil De Sol
Tapa Final

M27-48/A

M10 Tijli Çubuk 15 cm
M10 Rod 15 cm
M10 Tige Fileté 15 cm
M10 Barra 15 cm

M27-52

M10 Pul
M10 Washer
Rondelle M10
M10 Arandela

M27-52/A

M10 Flanşlı Somun
M10 Nut And Washer
Ecrou Avec Rondelle M10
M10 Tuerca Con Arandela

M27-57

M10*150 Beton Vidası - Multi Monti
M10*150 Concrete Screw - Multi Monti
Vis Béton M10×150
M10*150 Tornillo Para Hormigón - Multi Monti

MC-610

6 ' lik Profil Birleştirme Pimi (30 mm)
6 mm Base Profile Interconnector (30 mm)
6 mm Pièce Connecteur Profil De Sol (30 mm)
6 mm Conector Perfil Base (30 mm)

GS-12

Tested

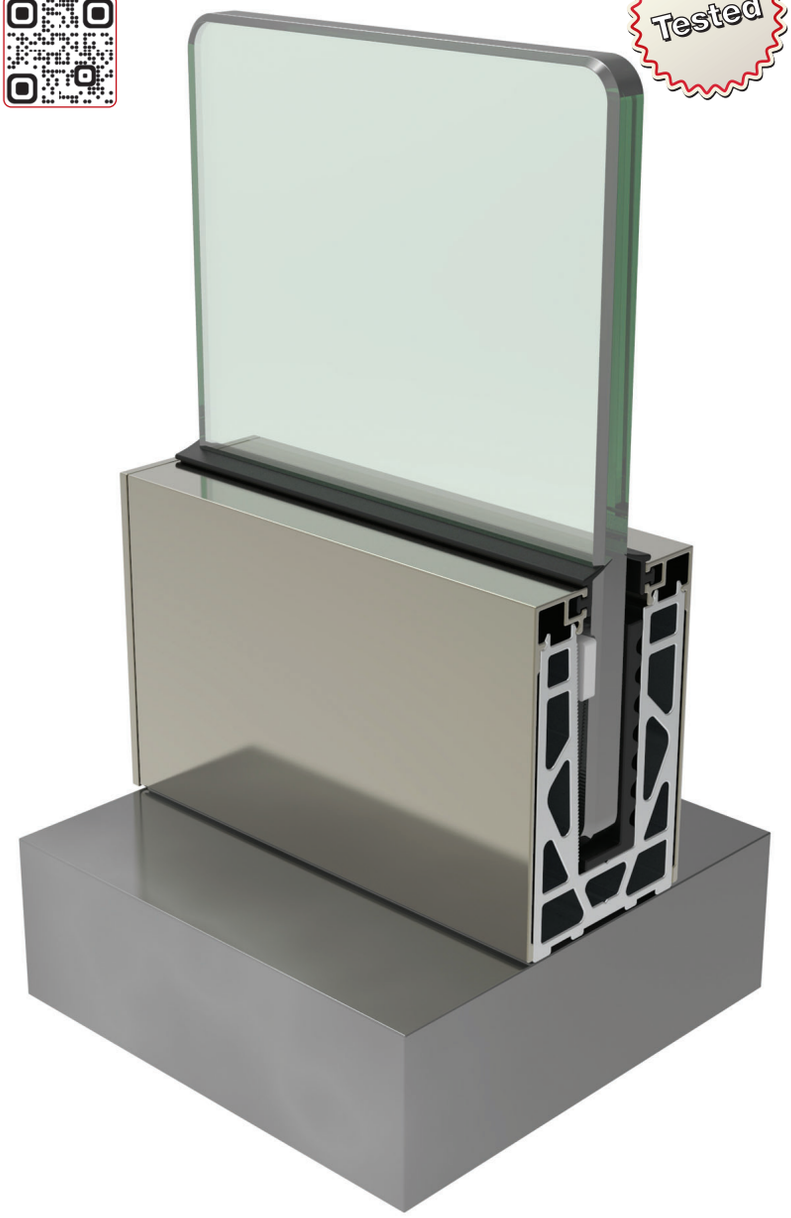

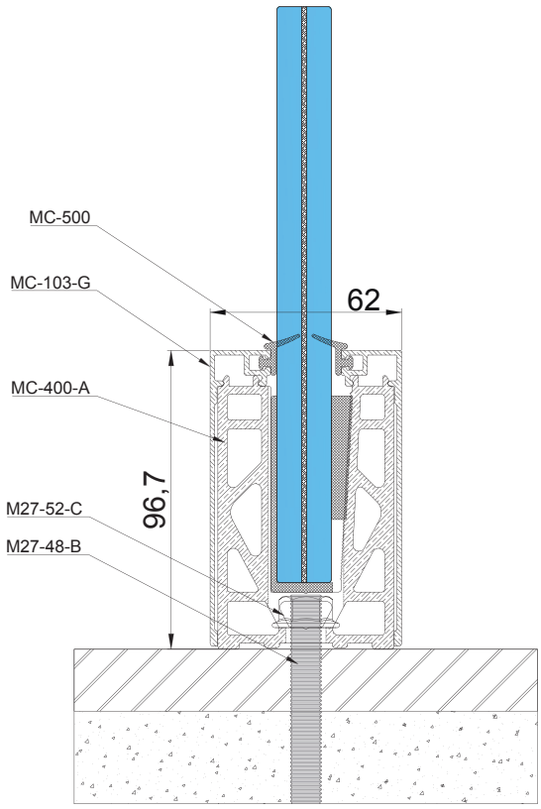
MC-500
MC-103-G
MC-400-A
M27-52-C
M27-48-B
62
96,7

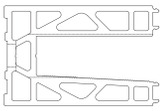

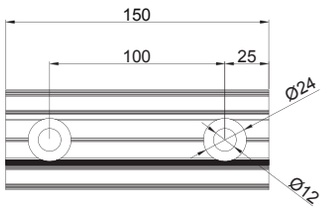
150
100
25
Ø24
Ø12

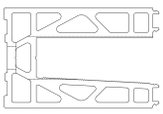

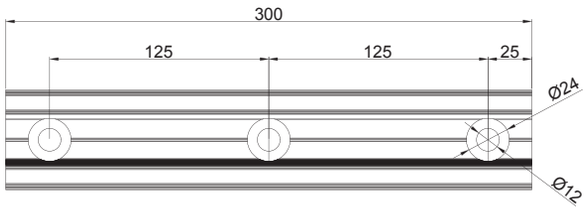
300
125
125
25
Ø24
Ø12

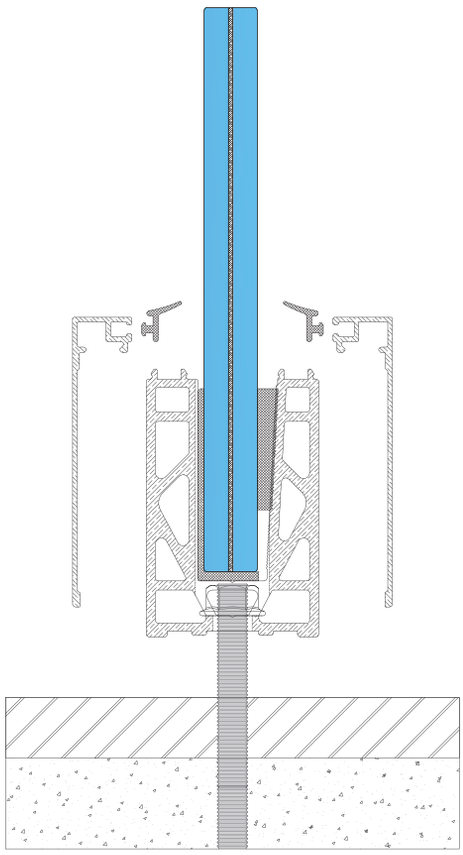

GS-12

Tested

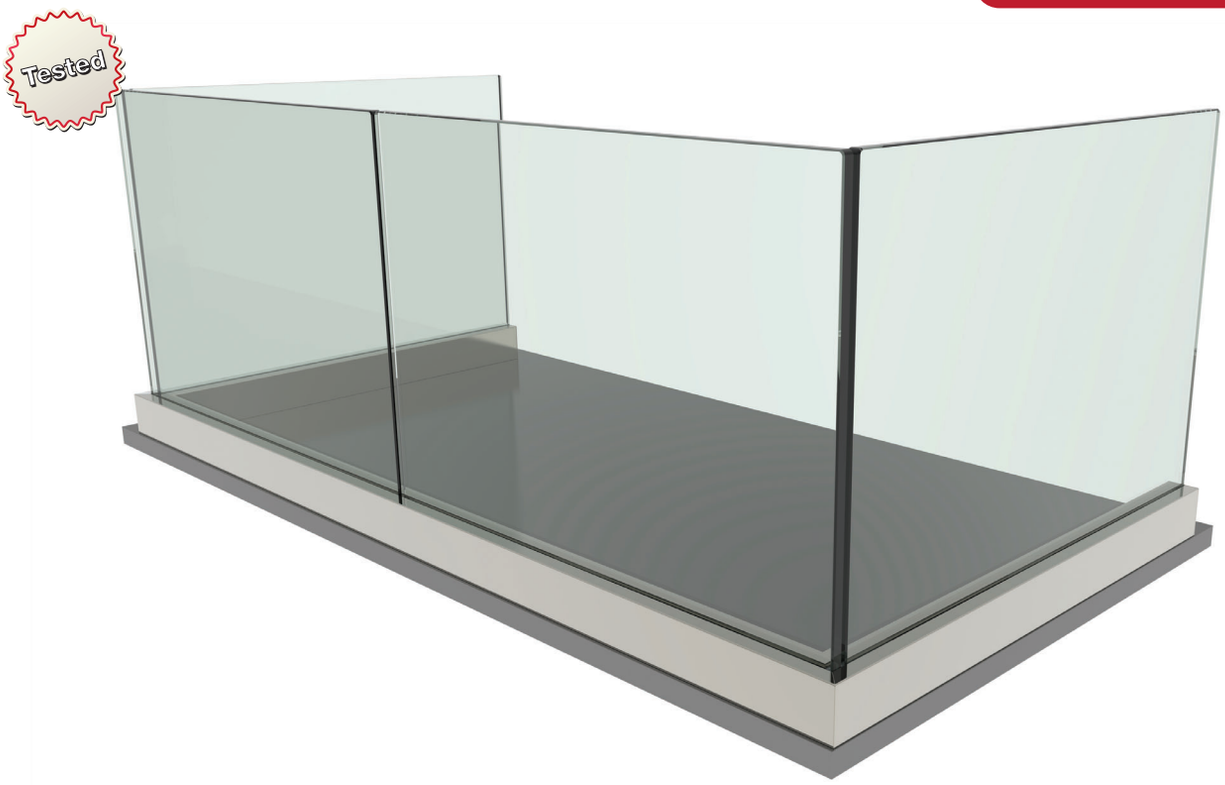

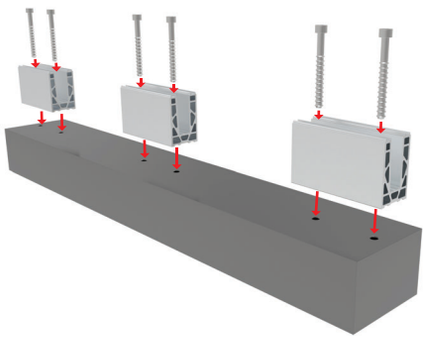

1

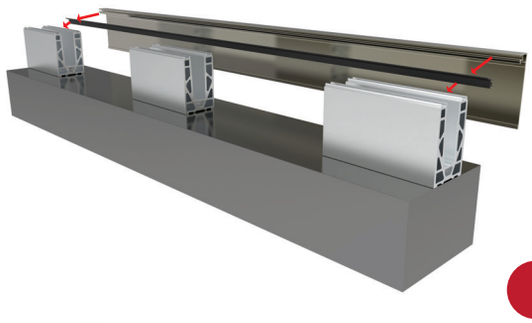

2

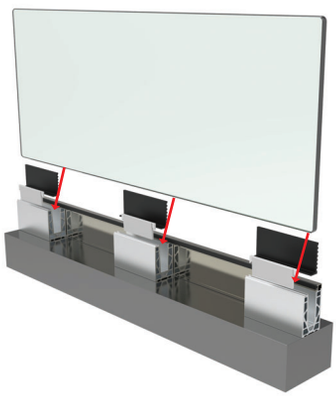

3

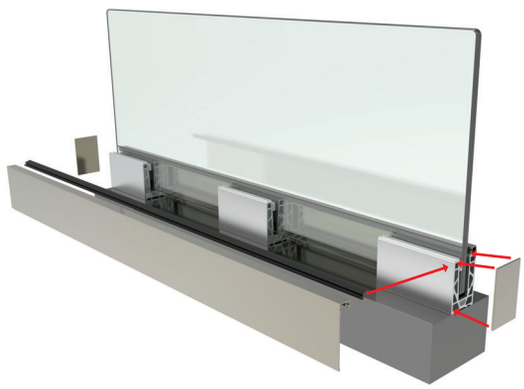

4

5

GS-12

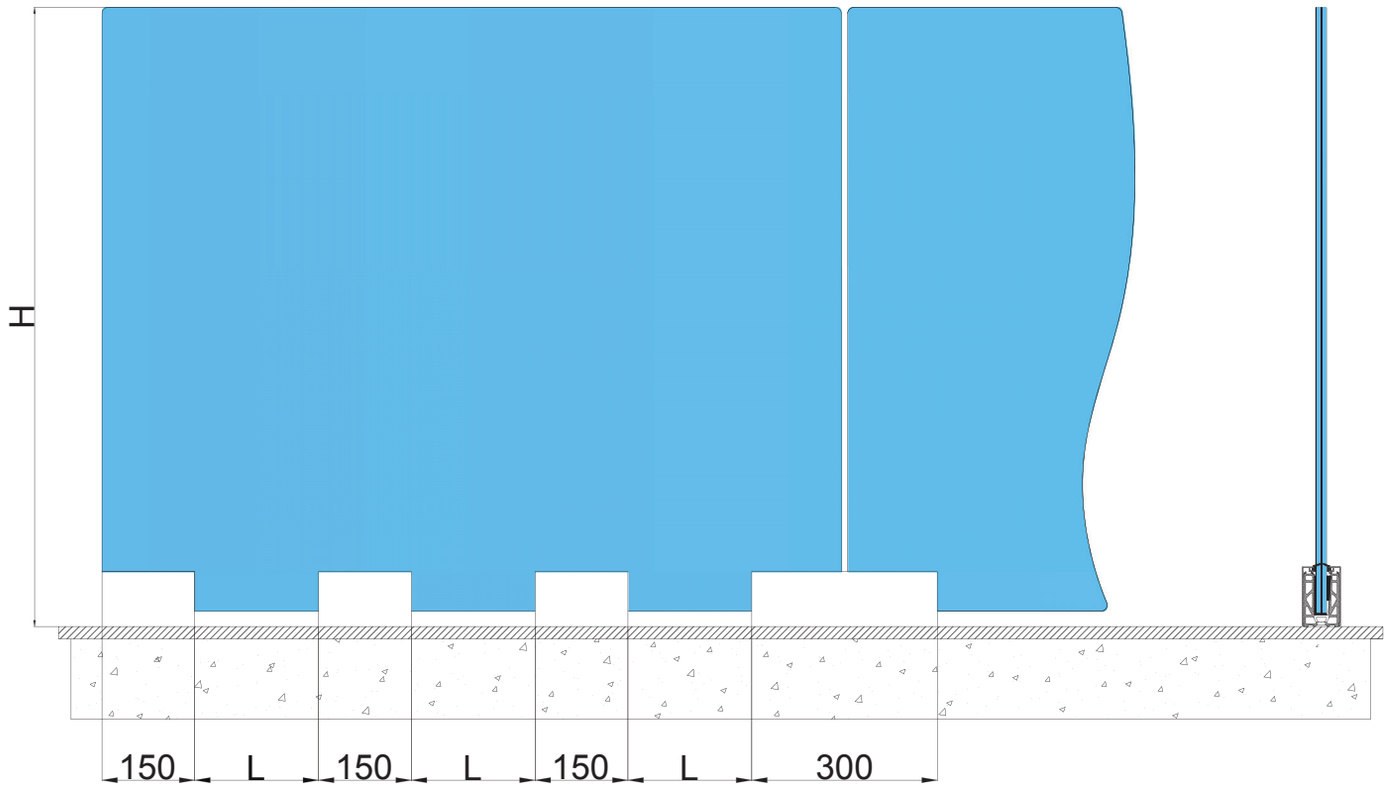

Cam Yüksekliği/H Glass Height/H Hauteur Verre/H Altura De Vidrio/H	Kalınlık (mm) Thickness (mm) Epaisseur (mm) Espesor (mm)	L	(kN)	(J)
0-599 mm	(5+1,52+5),(6+1,52+6)	350 mm	-	-
	(8+1,52+8)	400 mm	-	-
600-899 mm	(5+1,52+5),(6+1,52+6)	300 mm	-	-
	(8+1,52+8)	350 mm	-	-
900-1099 mm	(5+1,52+5),(6+1,52+6)	250 mm	-	-
	(8+1,52+8)	300 mm	-	-
1100-1200 mm	(5+1,52+5),(6+1,52+6)	200 mm	-	-
	(8+1,52+8)	266 mm	2,6	600

*Bina yüksekliğine göre kullanılacak cam kalınlığı ve ürün aralığı değişkenlik gösterebilir.
*Depending on the building's height the measurements and standards may change
*Les épaisseurs de verre et les entraxe peuvent varier selon la hauteur du batiment.
*Dependiendo de la altura del edificio, las medidas y las estandares pueden cambiar

MC-400/A

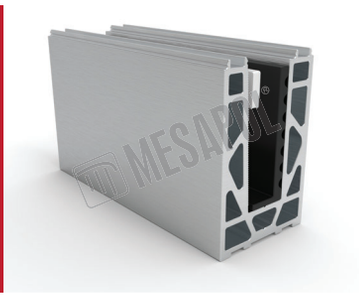

Cam Yatağı Takımı 15 cm (10 - 12 - 16 mm Cam)
Base Profile Set 15 cm (10 - 12 - 16 mm Cam)
Profil De Sol 15 cm (Verre 10-12-16 mm)
Base Perfil 15 cm (10 -16 mm Vidrio) (Con Cuña Y Plástica Para Apretar El Vidrio)

MC-401/A

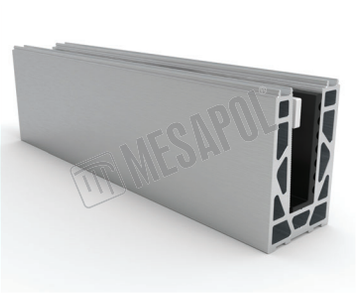

Cam Yatağı Takımı 30 cm (10 - 12 - 16 mm Cam)
Base Profile Set 30 cm (10 - 12 - 16 mm Cam)
Profil De Sol 30 cm (Verre 10-12-16 mm)
Base Perfil 30 cm (10 -16 mm Vidrio) (Con Cuña Y Plástica Para Apretar El Vidrio)

MC-103/G

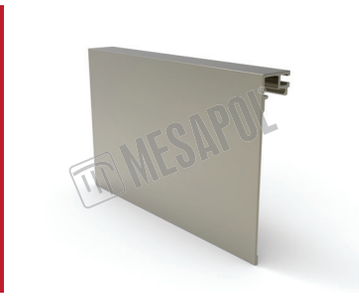

Cam Yatağı Kapağı (3,60 kg / 6 mt)
Base Profile Cover (3,60 kg / 6 mt)
Enjoliveur Droit Profil De Sol (3,60 kg / 6 mt)
Perfil Lateral Para Bases (3,60 kg / 6 mt)

MC-500

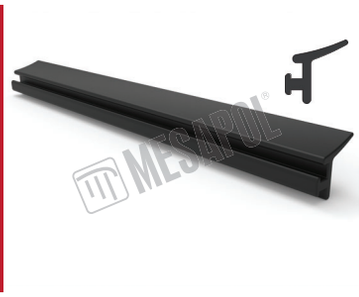

10 - 12 - 16 - 20 mm Cam Fitili (1 mt)
10 - 12 - 16 - 20 mm Glass Gasket (1 mt)
10-12-16-20 mm Joint D'enjoliveur Pour Verre (1 mt)
10 - 12 - 16 - 20 mm Goma (1 mt)

MC-602

Cam Yatağı Tapası
Base Profile Plug
Embout De Finiton Pour Profil De Sol
Tapa Final

M27-48/B

M08 Tijli Çubuk 15 cm
M08 Rod 15 cm
M08 Tige Fileté 15 cm
M08 Barra 15 cm

M27-59

M08 Pul
M08 Washer
Rondelle M08
M08 Arandela

M27-52/C

M08 Flanşlı Somun
M08 Nut And Washer
Ecrou Avec Rondelle M08
M08 Tuerca Con Arandela

M27-57/A

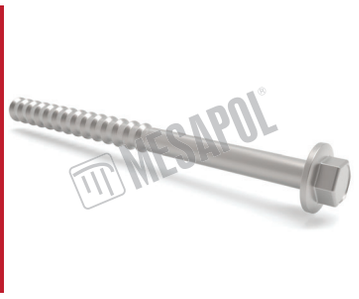

M08*150 Beton Vidası - Multi Monti
M08*150 Concrete Screw - Multi Monti
Vis Béton M08×150
M08*150 Tornillo Para Hormigón - Multi Monti

GS-12/L

Tested

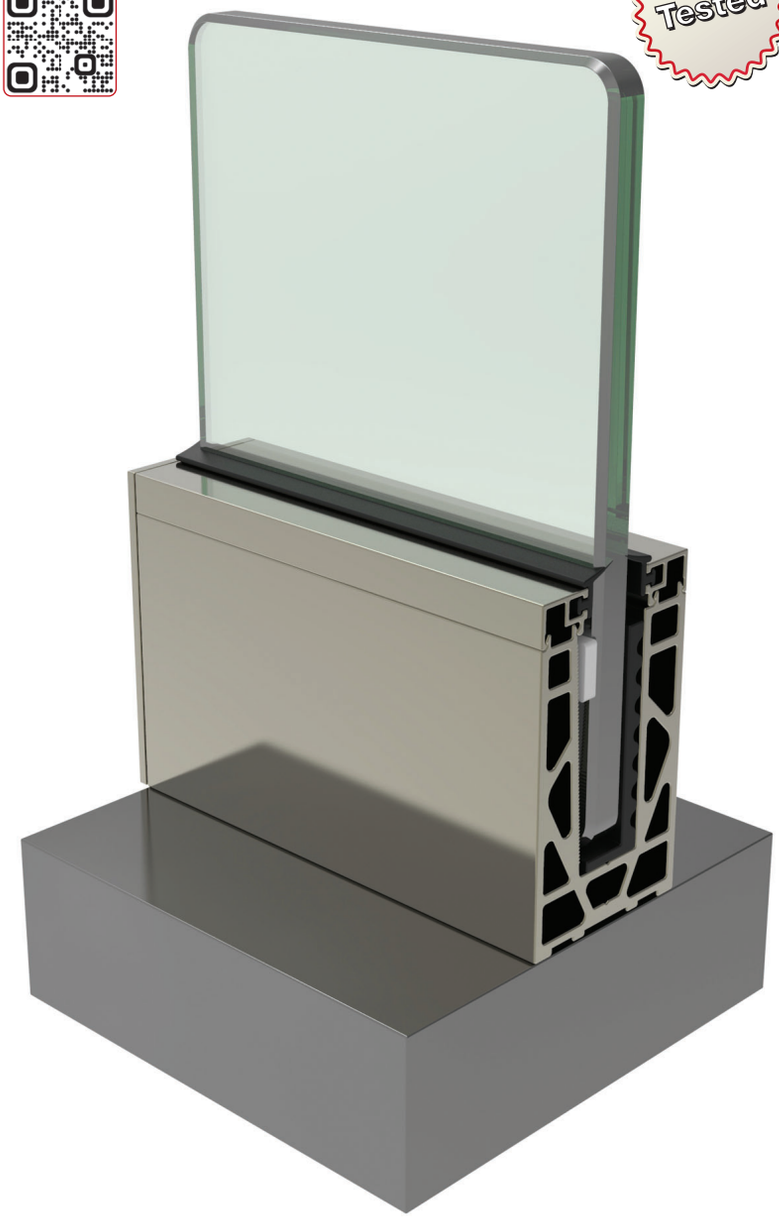

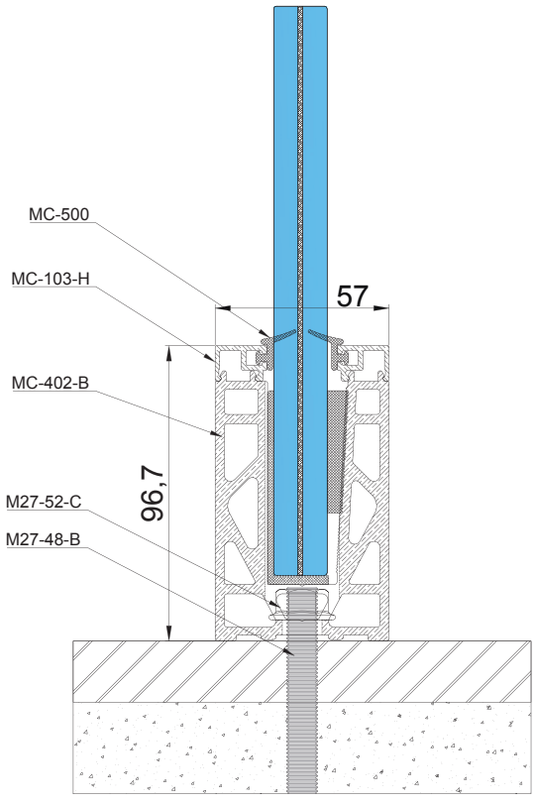

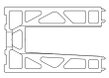

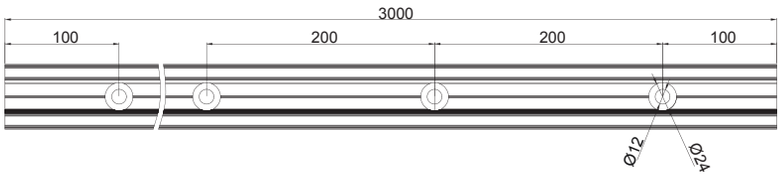

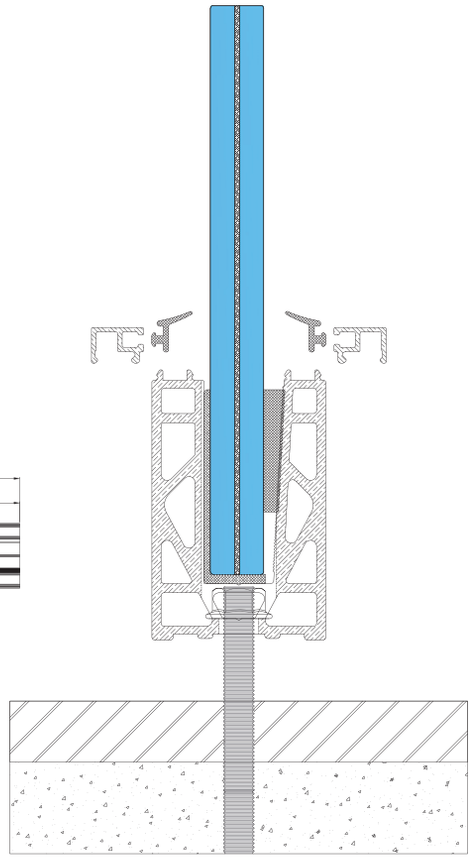

GS-12/L

Tested

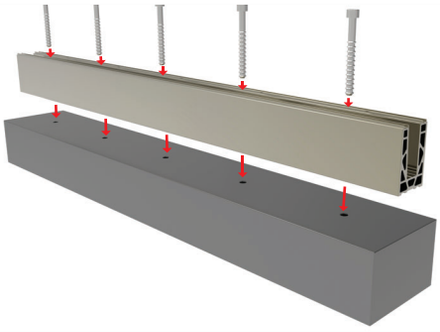

1

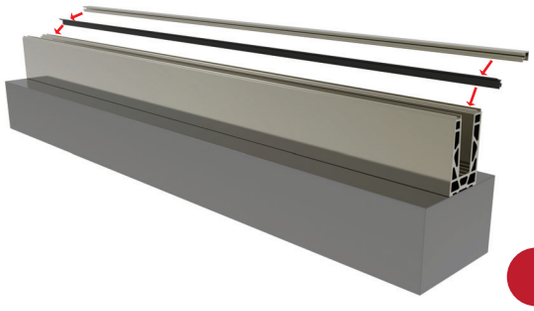

2

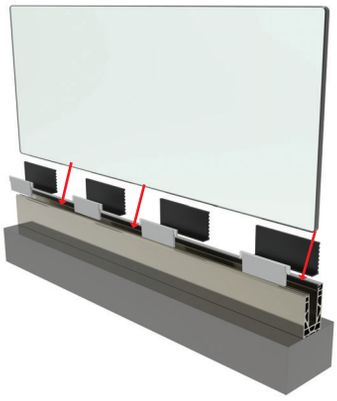

3

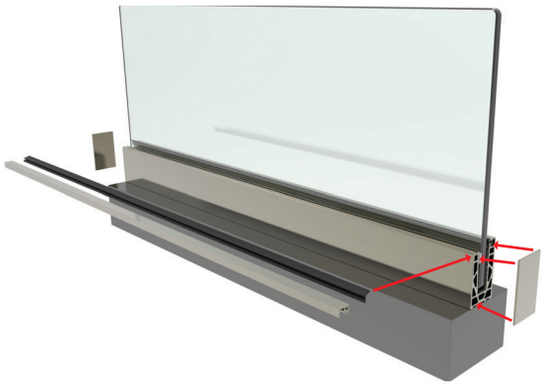

4

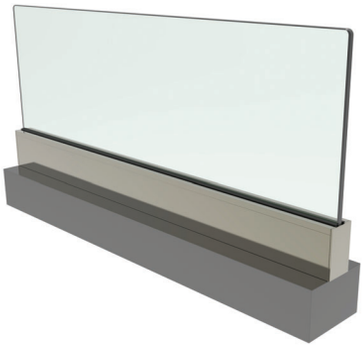

5

GS-12/L

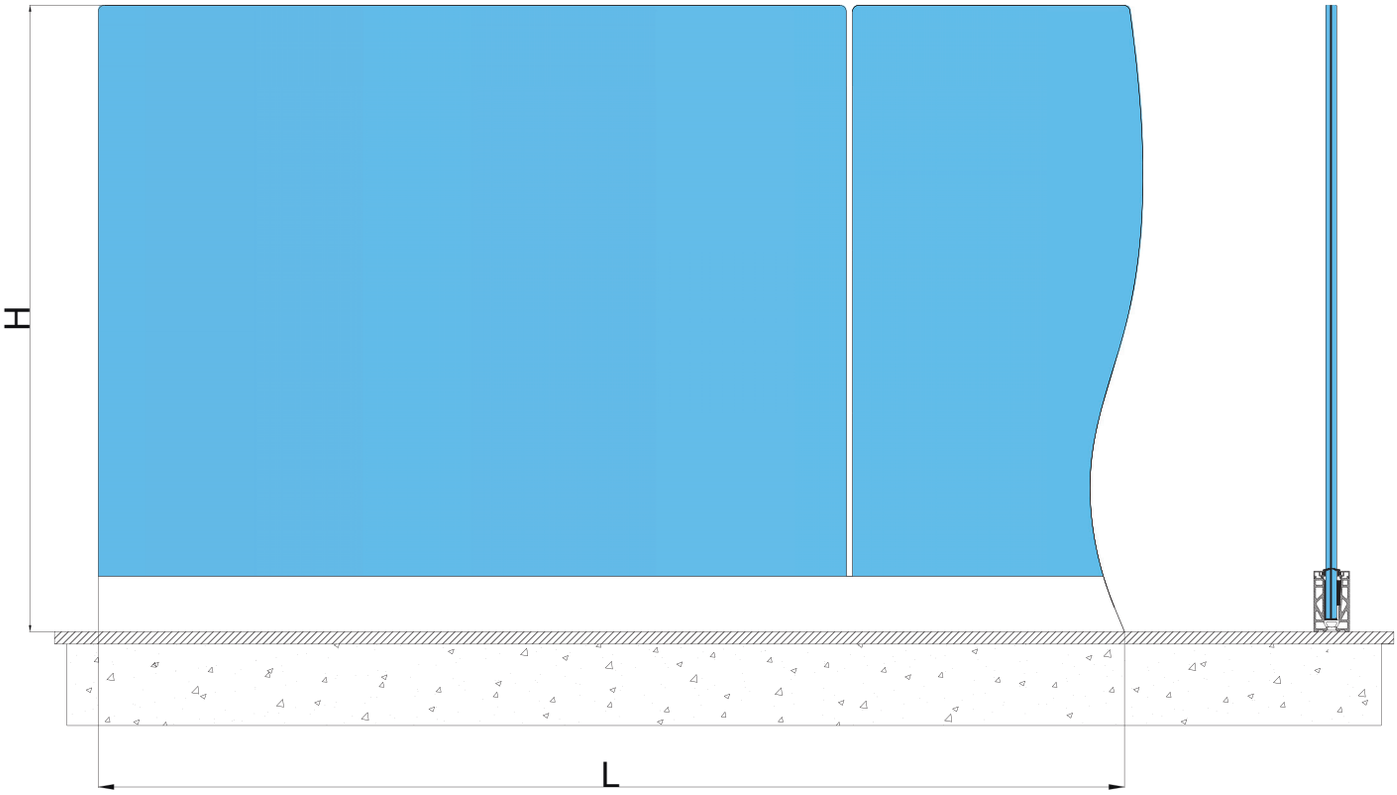

Cam Yüksekliği/H Glass Height/H Hauteur Verre/H Altura De Vidrio/H	Kalınlık (mm) Thickness (mm) Epaisseur (mm) Espesor (mm)	L	(kN)	(J)
0-1200 mm	(5+1,52+5),(6+1,52+6)	3000 mm	-	-
	(8+1,52+8)		5,1	600

MC-402/B

Cam Yatağı Takımı 300 cm (10 - 12 - 16 mm Cam)
Base Profile Set 300 cm (10 - 12 - 16 mm Cam)
Profil De Sol 300 cm (Verre 10-12-16 mm)
Base Perfil 300 cm (10 -16 mm Vidrio) (Con Cuña Y Parte Plástica Para Apretar El Vidrio)

MC-103/H

Cam Yatağı Kapağı (1,20 kg / 6 mt)
Base Profile Cover (1,20 kg / 6 mt)
Enjoliveur Profil De Sol (1,20 kg / 6 mt)
Perfil Tapa Superior Para Base (1,20 kg / 6 mt)

MC-500

10 - 12 - 16 - 20 mm Cam Fitili (1 mt)
10 - 12 - 16 - 20 mm Glass Gasket (1 mt)
10-12-16-20 mm Joint D'enjoliveur Pour Verre (1 mt)
10 - 12 - 16 - 20 mm Goma (1 mt)

MC-603

Cam Yatağı Tapası
Base Profile Plug
Embout De Finiton Pour Profil De Sol
Tapa Final

M27-48/B

M08 Tijli Çubuk 15 cm
M08 Rod 15 cm
M08 Tige Fileté 15 cm
M08 Barra 15 cm

M27-59

M08 Pul
M08 Washer
Rondelle M08
M08 Arandela

M27-52/C

M08 Flanşlı Somun
M08 Nut And Washer
Ecrou Avec Rondelle M08
M08 Tuerca Con Arandela

M27-57/A

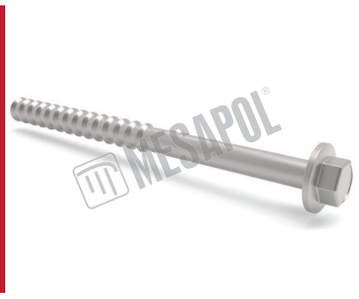

M08*150 Beton Vidası - Multi Monti
M08*150 Concrete Screw - Multi Monti
Vis Béton M08×150
M08*150 Tornillo Para Hormigón - Multi Monti

GS-13

Tested

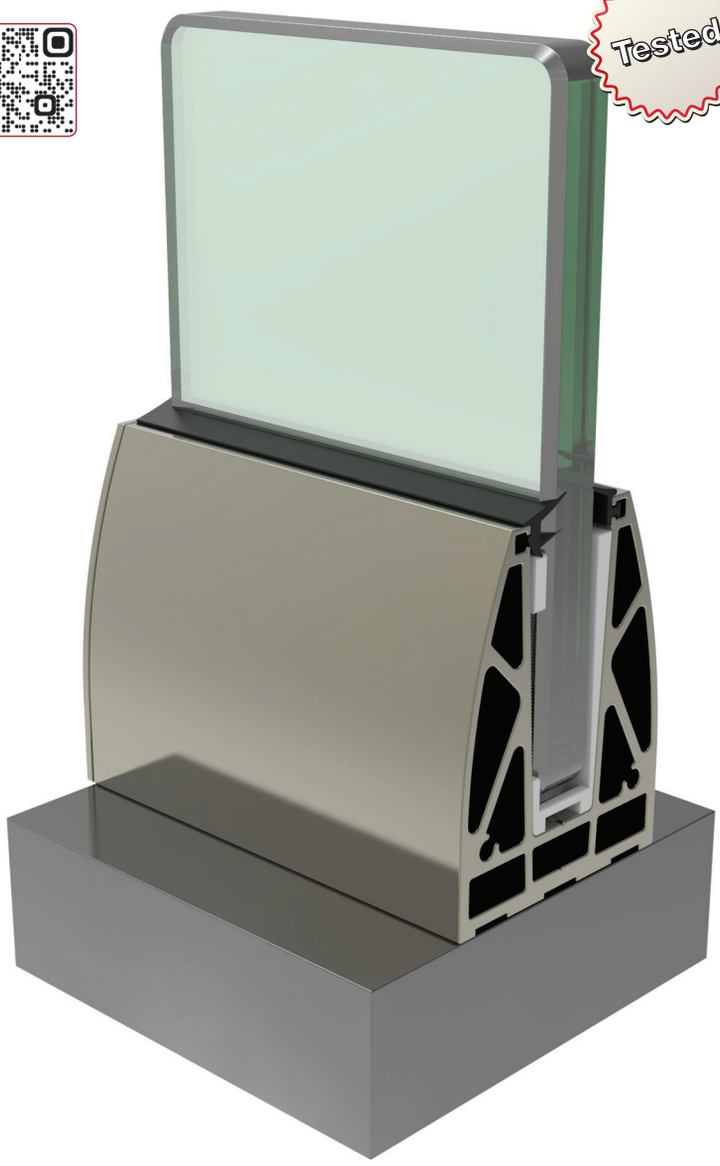

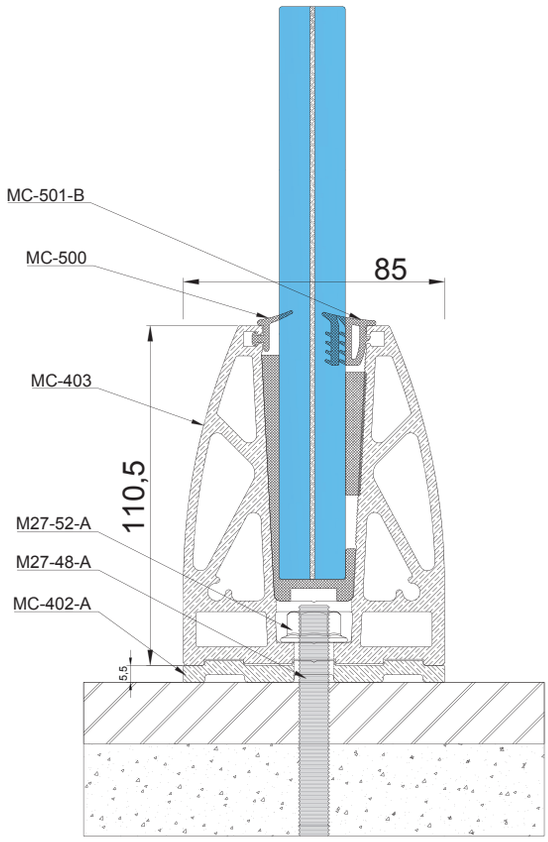

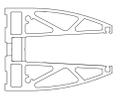

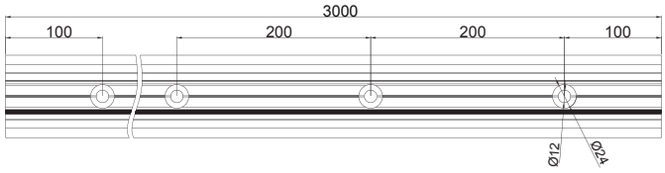

MC-402-A

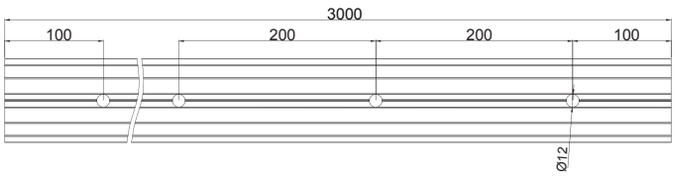

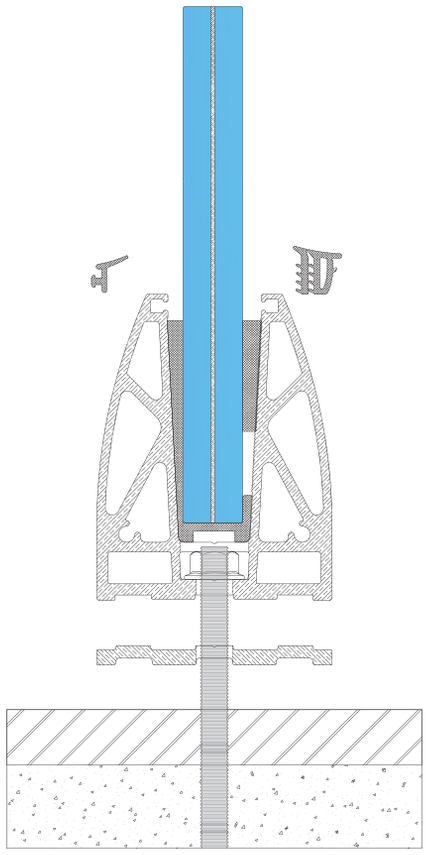

GS-13

Tested

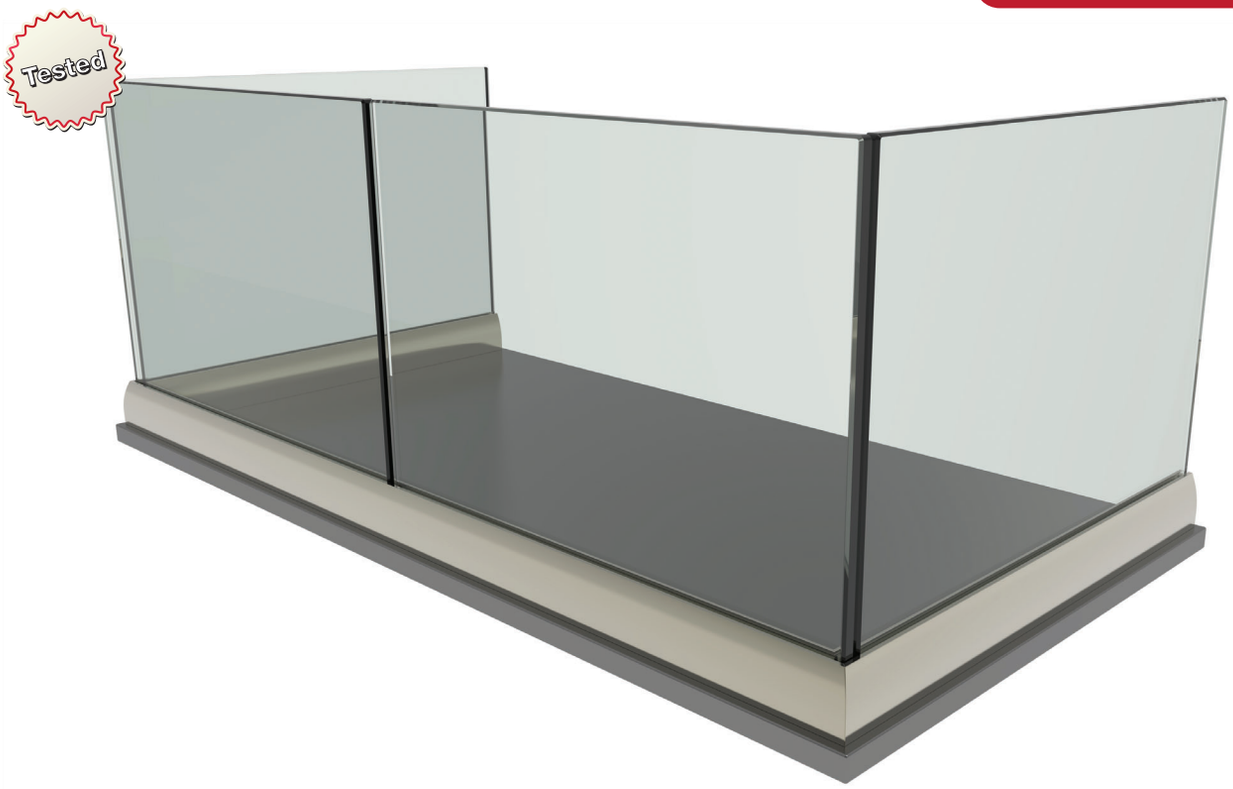

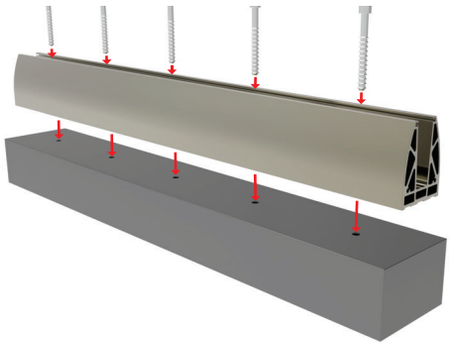

1

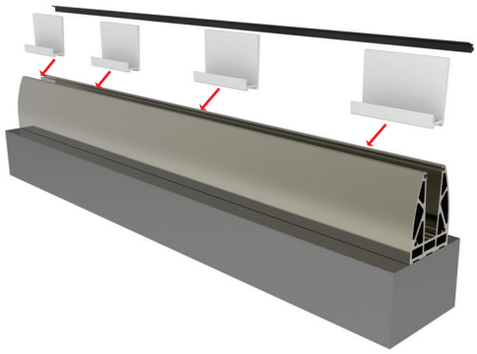

2

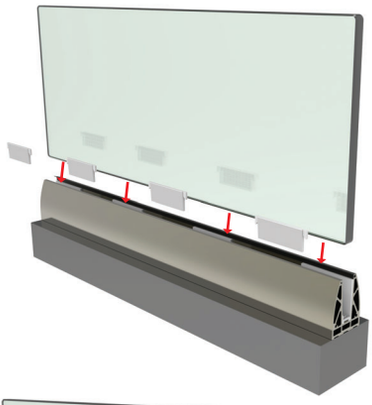

3

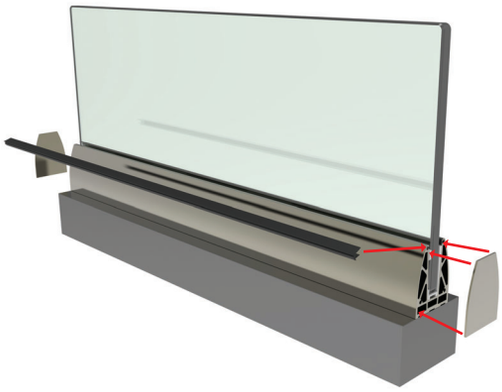

4

5

GS-13

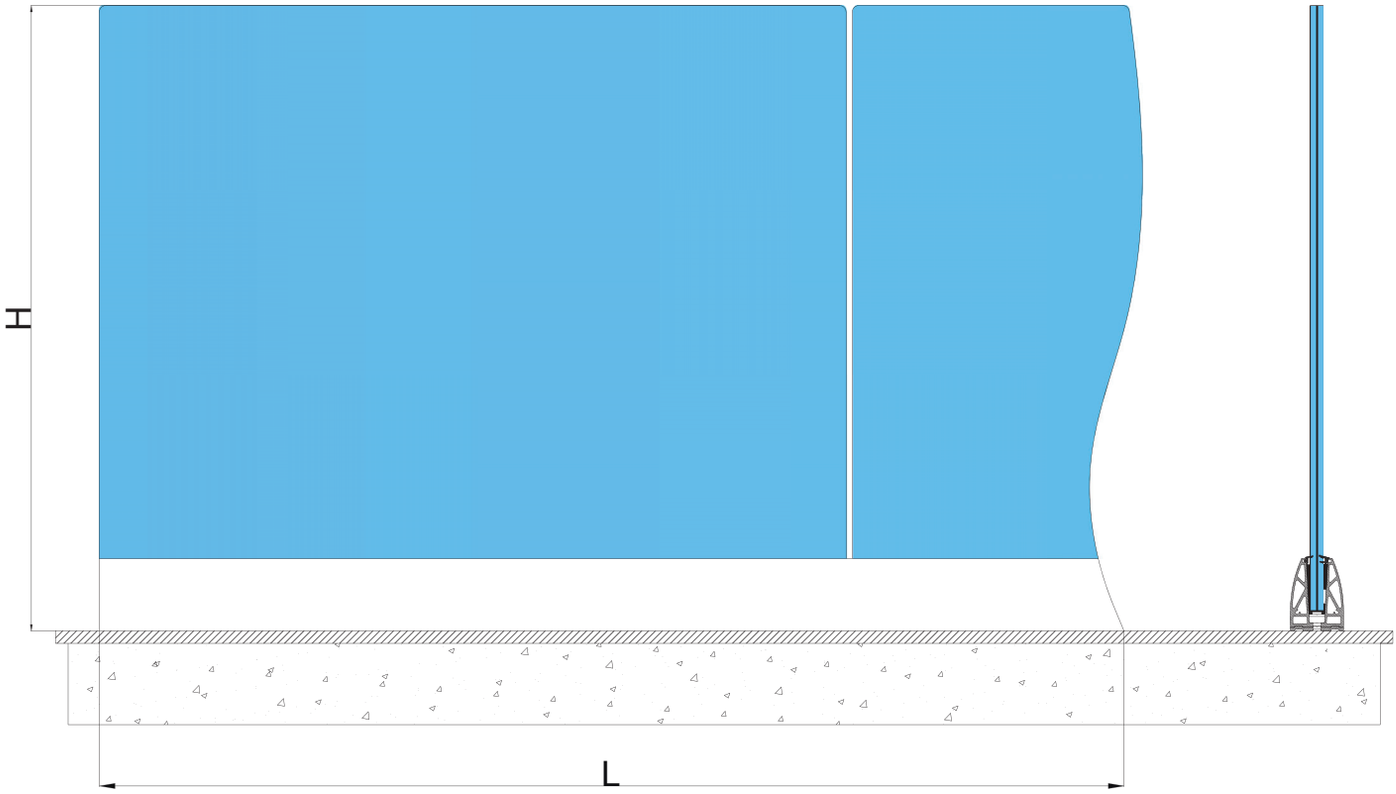

Cam Yüksekliği/H Glass Height/H Hauteur Verre/H Altura De Vidrio/H	Kalınlık (mm) Thickness (mm) Epaisseur (mm) Espesor (mm)	L	(kN)	(J)
0-1200 mm	(8+1,52+8)	3000 mm	6,2	600
	(10+1,52+10)	3000 mm	9,6	600

MC-403

Cam Yatağı Takımı Elips 300 cm (16 - 20 mm Cam)
Ellipse Base Profile 300 cm (16-20 mm Glass Thickness)
Profil De Sol Ovale 300 cm (Verre 16-20 mm)
Base Perfil 300 cm (16 -20 mm Vidrio) (Con Cuña Y Parte Plástica Para Apretar El Vidrio)

MC-500

8 - 10 - 12 - 16 - 20 mm Cam Fitili (1 mt)
8 - 10 - 12 - 16 - 20 mm Glass Gasket (1 mt)
8-10-12-16-20 mm Joint D'enjoliveur Pour Verre (1 mt)
8 - 10 - 12 - 16 - 20 mm Goma (1 mt)

MC-501/B

8-10-12-16-20 mm Cam Kama Fitili (1 mt)
8-10-12-16-20 mm Wedge Glass Gasket (1 mt)
8-10-12-16-20 mm Joint De Vitrage Intérieur (1 mt)
8-10-12-16-20 mm Goma (1 mt)

MC-402/A

Cam Yatağı Drenaj Profili 300 cm - Büyük
Drainage Profile 300 cm - Big
Drainage Pour Profil De Sol 300 cm
Perfil De Drenaje 300 cm

MC-604

Cam Yatağı Tapası Elips
Ellipse Base Profile Plug
Embout De Finiton Pour Profil De Sol
Tapa Final Elipse

M27-48/A

M10 Tijli Çubuk 15 cm
M10 Rod 15 cm
M10 Tige Fileté 15 cm
M10 Barra 15 cm

M27-52

M10 Pul
M10 Washer
Rondelle M10
M10 Arandela

M27-52/A

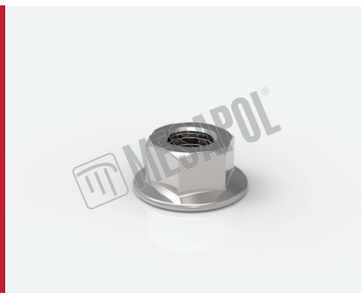

M10 Flanşlı Somun
M10 Nut And Washer
Ecrou Avec Rondelle M10
M10 Tuerca Con Arandela

M27-57

M10*150 Beton Vidası - Multi Monti
M10*150 Concrete Screw - Multi Monti
Vis Béton M10×150
M10*150 Tornillo Para Hormigón - Multi Monti

MC-610

6 ' lik Profil Birleştirme Pimi (30 mm)
6 mm Base Profile Interconnector (30 mm)
6 mm Pièce Connecteur Profil De Sol (30 mm)
6 mm Conector Perfil Base (30 mm)

GS-13/E

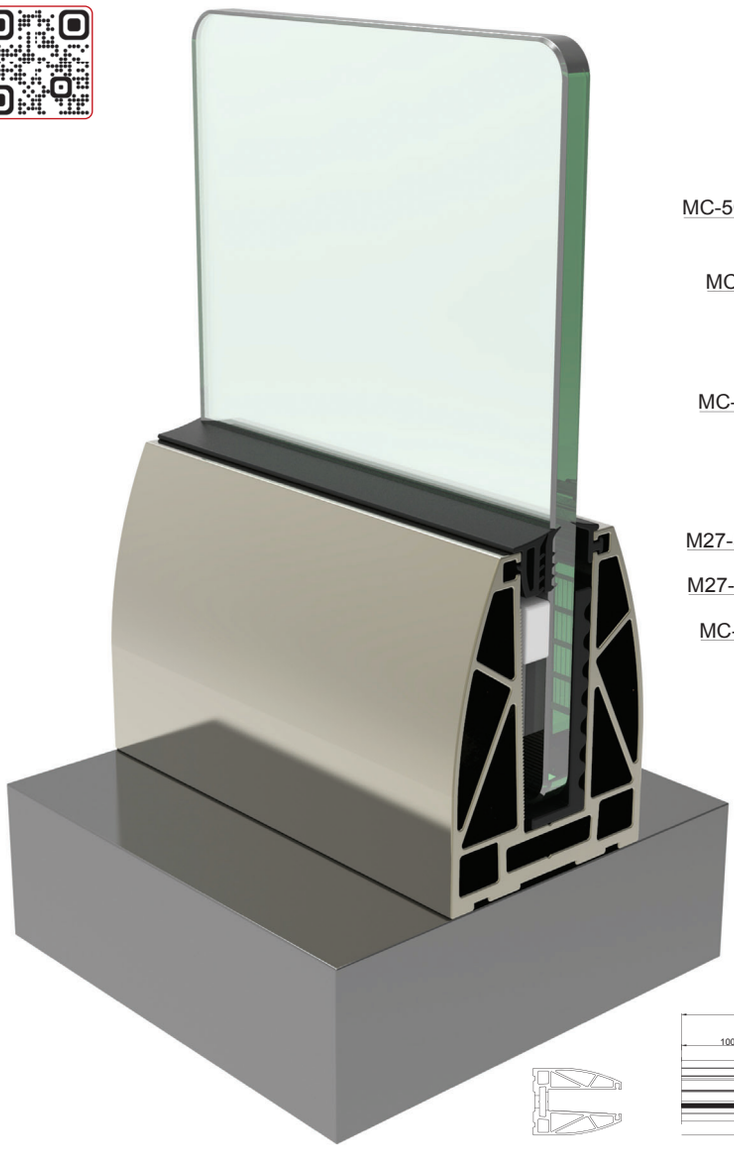

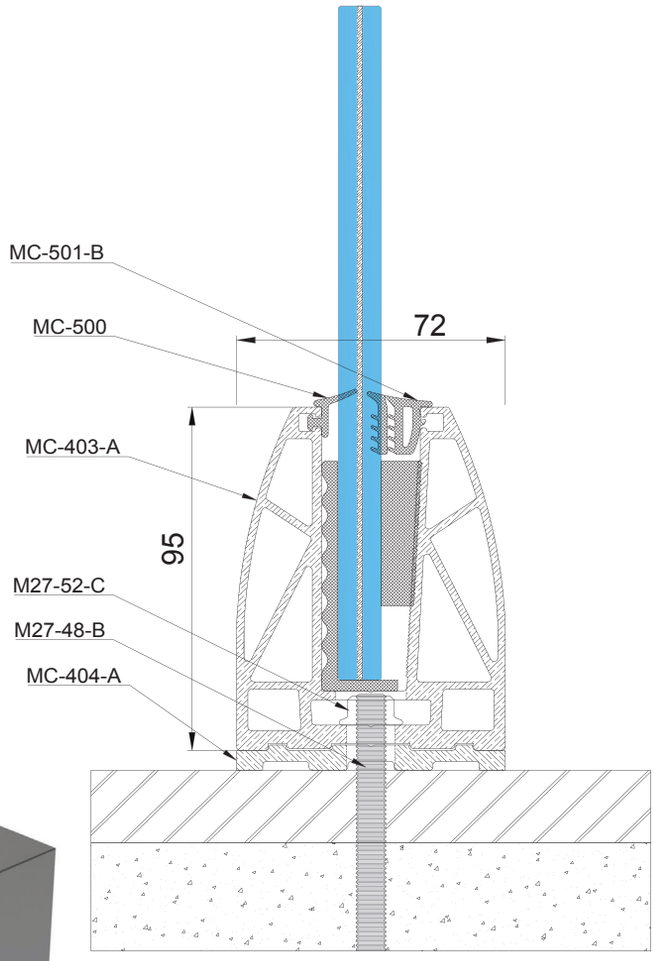
MC-501-B
MC-500
72
MC-403-A
95
M27-52-C
M27-48-B
MC-404-A

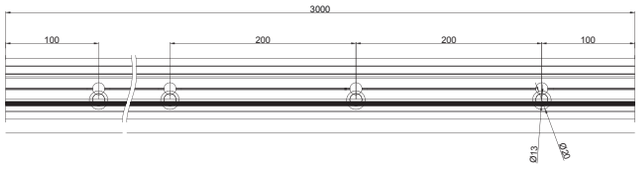
3000
100
200
200
100
Ø13
Ø8

MC-404-A

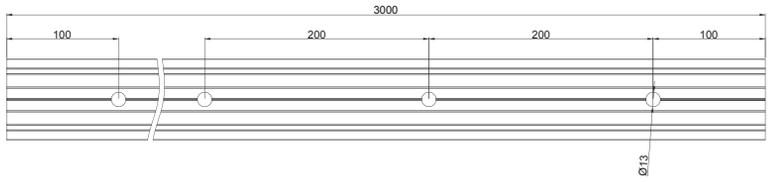
3000
100
200
200
100
Ø13

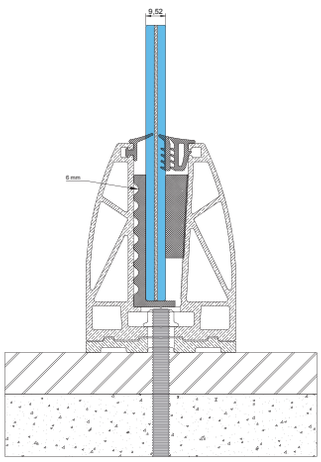
9,52
6 mm

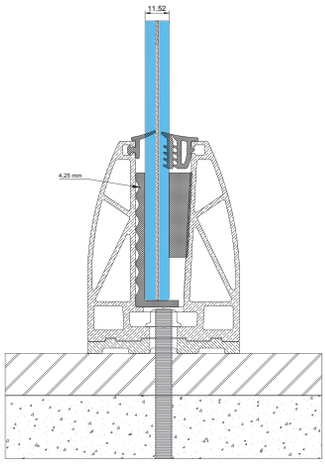
11,52
4,25 mm

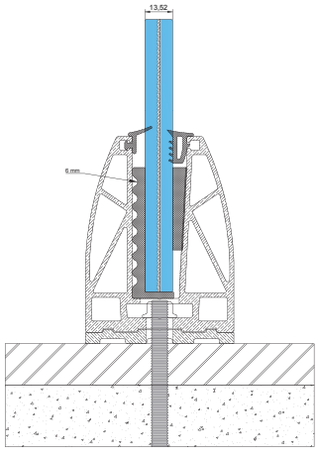
13,52
6 mm

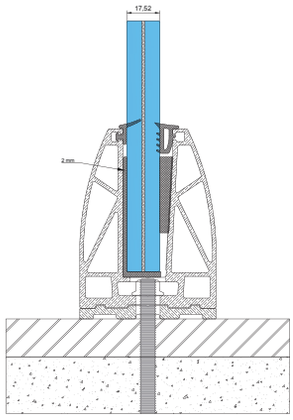
17,52
2 mm

GS-13/E

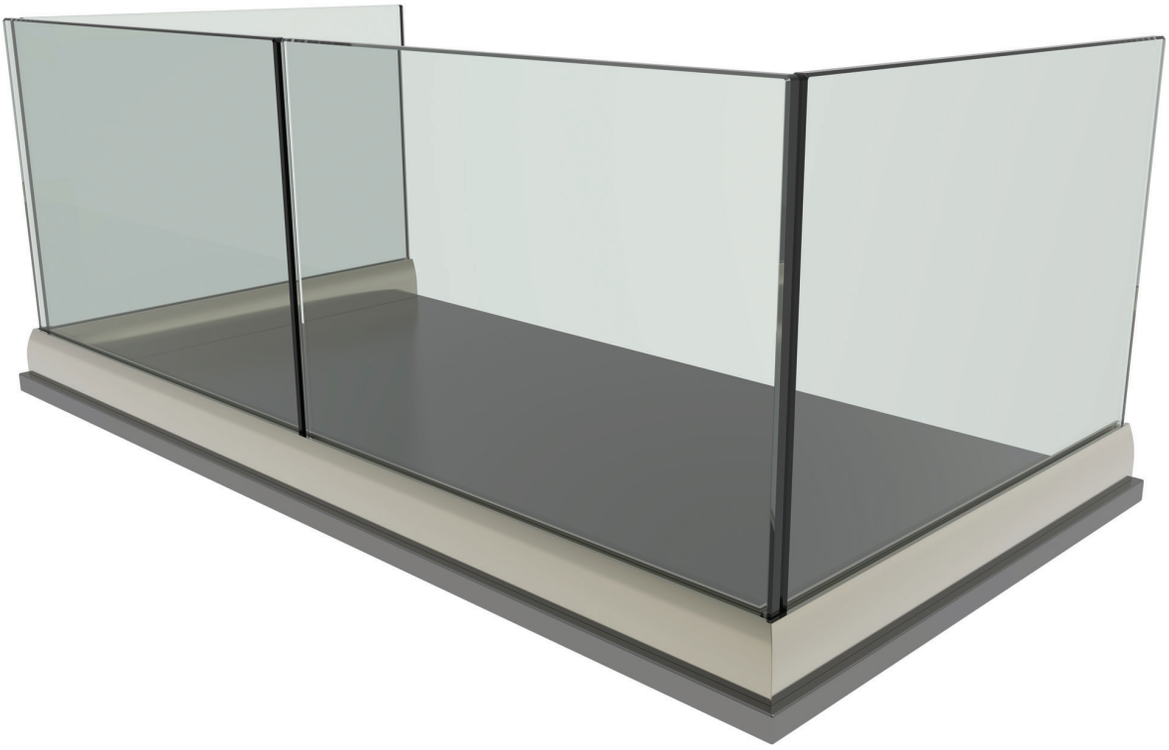

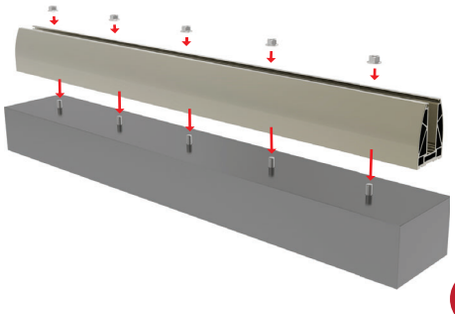

1

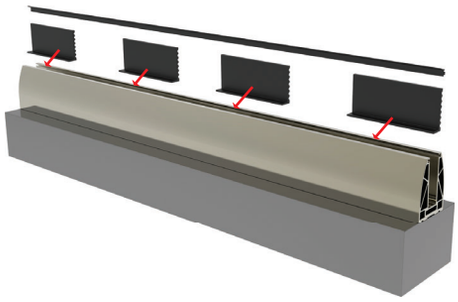

2

3

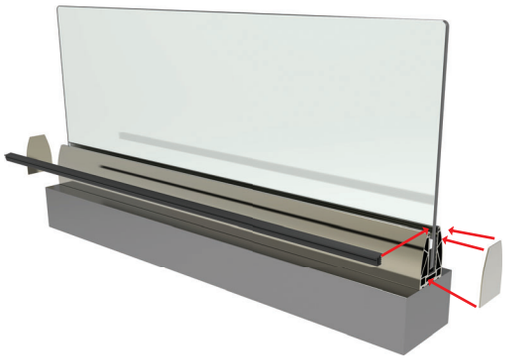

4

5

GS-13/E

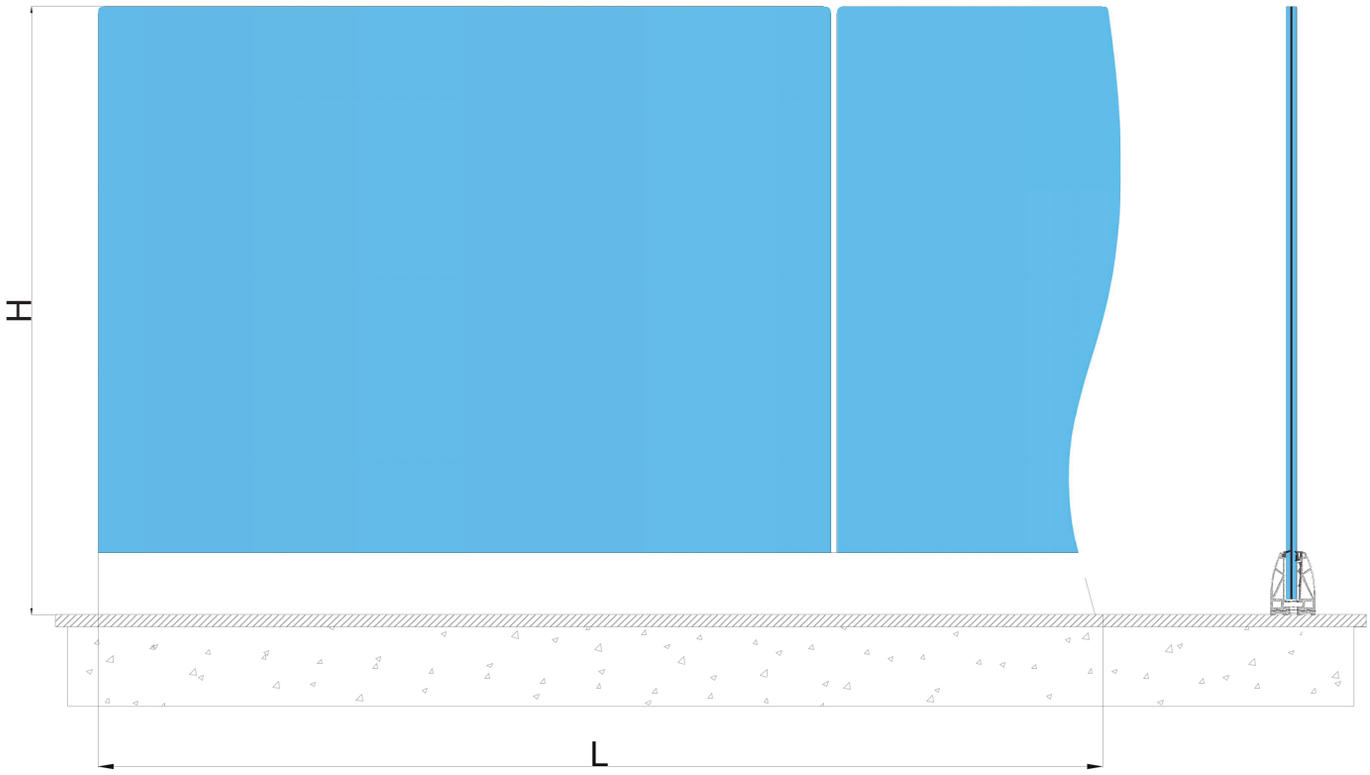

Cam Yüksekliği/H Glass Height/H Hauteur Verre/H Altura De Vidrio/H	Kalınlık (mm) Thickness (mm) Epaisseur (mm) Espesor (mm)	L	(kN)	(J)
0-1200 mm	(4+1,52+4)	3000 mm	-	-
	(5+1,52+5)	3000 mm	-	-
	(6+1,52+6)	3000 mm	2,4	600
	(8+1,52+8)	3000 mm	6,5	600

MC-403/A

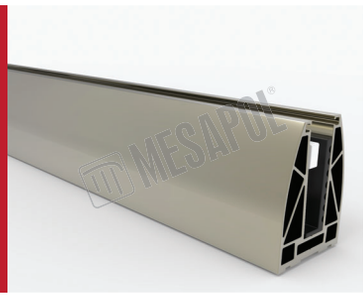

Cam Yatağı Takımı Elips Eko 300 cm (8-10-12-16 mm Cam)
Ellipse Base Profile Eco 300 cm (8-10-12-16 mm Glass Thickness)
Profil De Sol Ovale 300 cm Éco (Verre 8-10-12-16 mm)
Base Perfil 300 cm (8 -16 mm Vidrio) (Con Cuña Y Parte Plástica Para Apretar El Vidrio)

MC-500

8 - 10 - 12 - 16 - 20 mm Cam Fitili (1 mt)
8 - 10 - 12 - 16 - 20 mm Glass Gasket (1 mt)
8-10-12-16-20 mm Joint D'enjoliveur Pour Verre (1 mt)
8 - 10 - 12 - 16 - 20 mm Goma (1 mt)

MC-501/B

8-10-12-16-20 mm Cam Kama Fitili (1 mt)
8-10-12-16-20 mm Wedge Glass Gasket (1 mt)
8-10-12-16-20 mm Joint De Vitrage Intérieur (1 mt)
8-10-12-16-20 mm Goma (1 mt)

MC-404/A

Cam Yatağı Drenaj Profili 300 cm
Drainage Profile 300 cm
Drainage Pour Profil De Sol 300 cm
Perfil De Drenaje 300 cm

MC-604/A

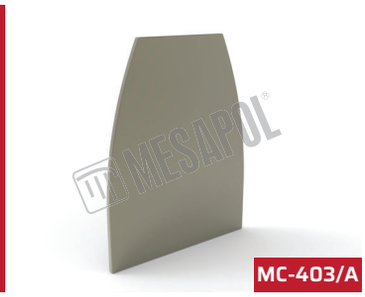

Cam Yatağı Tapası Elips Eko
Ellipse Base Profile Plug Eco
Embout De Finiton Pour Profil De Sol Éco
Para Perfil Elipse

M27-48/B

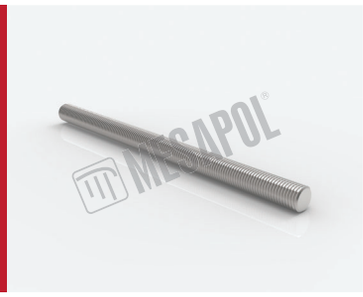

M08 Tijli Çubuk 15 cm
M08 Rod 15 cm
M08 Tige Fileté 15 cm
M08 Barra 15 cm

M27-52/C

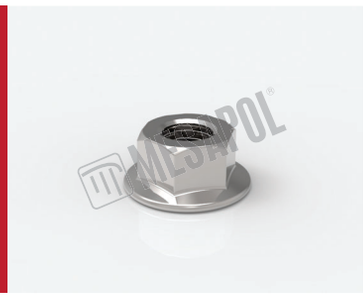

M08 Flanşlı Somun
M08 Nut And Washer
Ecrou Avec Rondelle M08
M08 Tuerca Con Arandela

GS-14

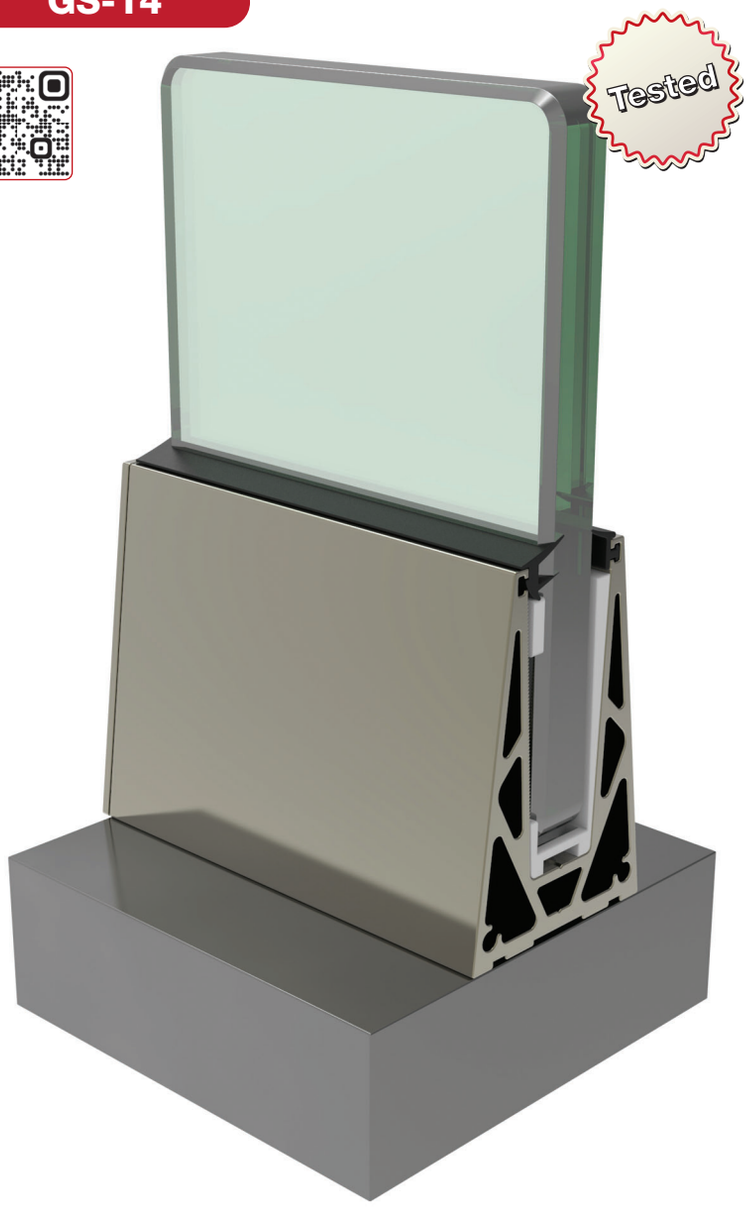
Tested

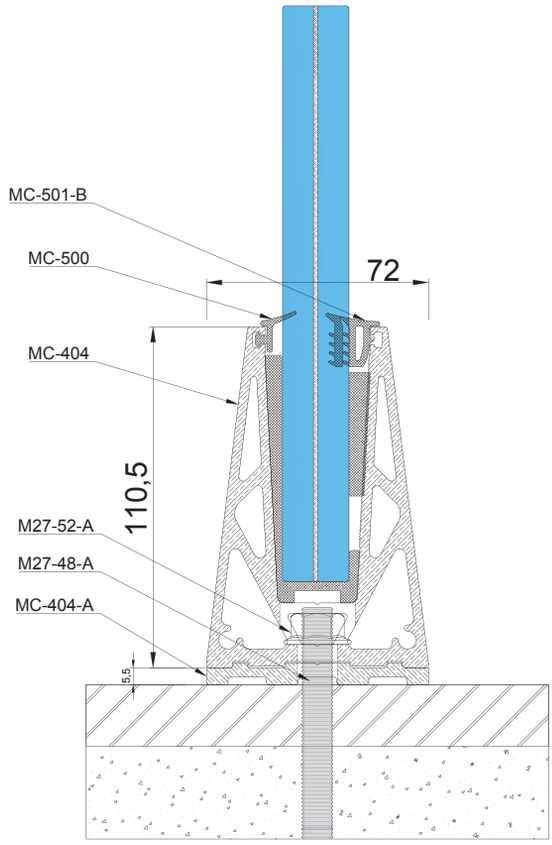
MC-501-B
MC-500
72
MC-404
110,5
M27-52-A
M27-48-A
MC-404-A
5,5

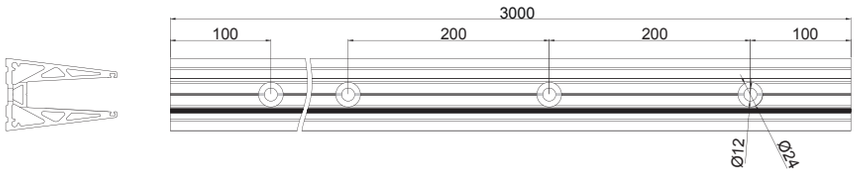
3000
100
200
200
100
Ø12
Ø24

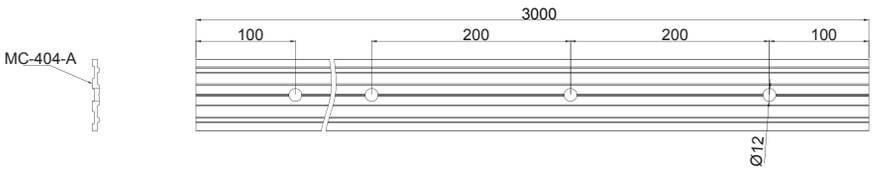
MC-404-A
3000
100
200
200
100
Ø12

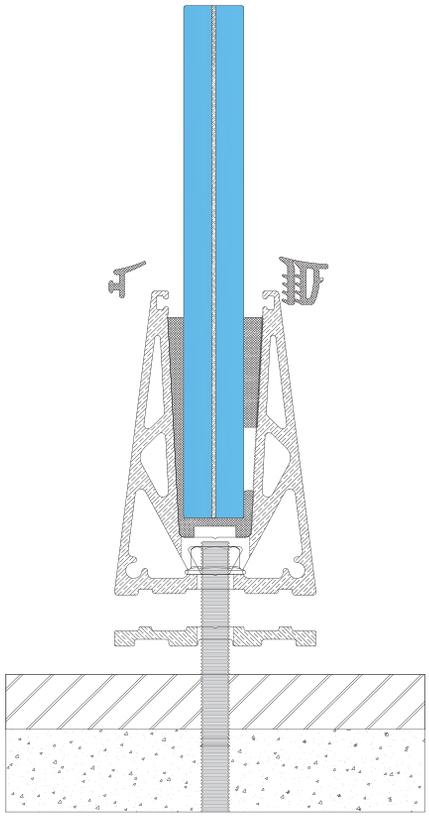

GS-14

Tested

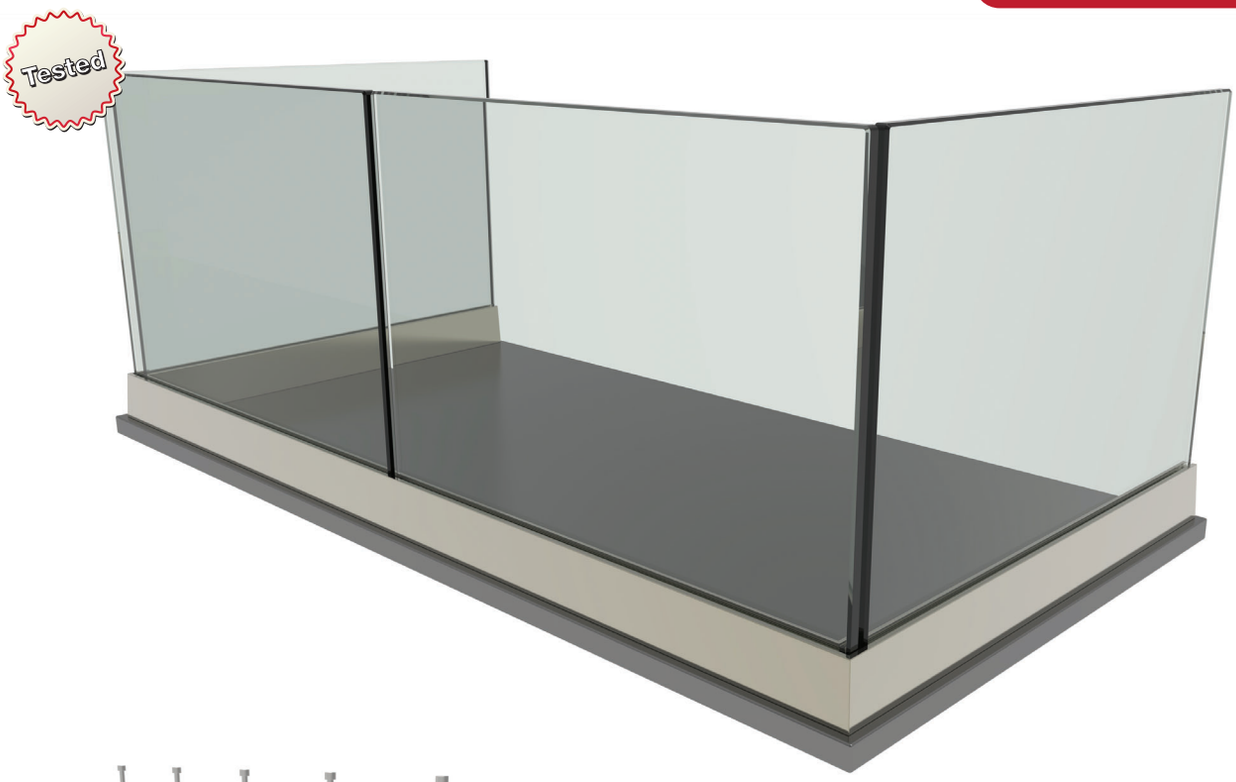

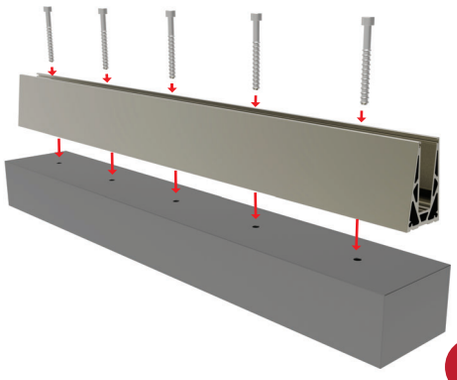

1

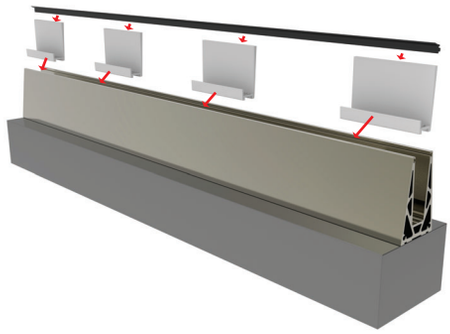

2

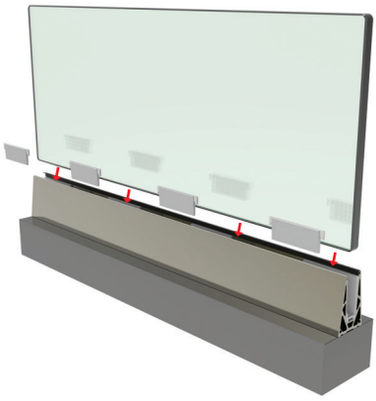

3

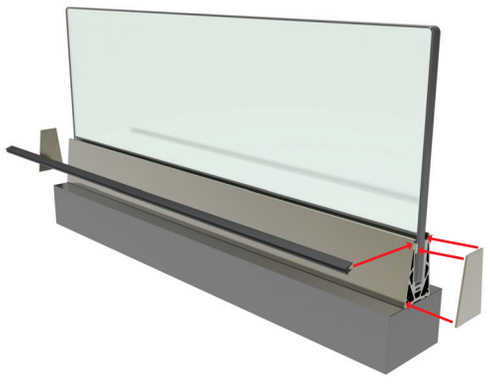

4

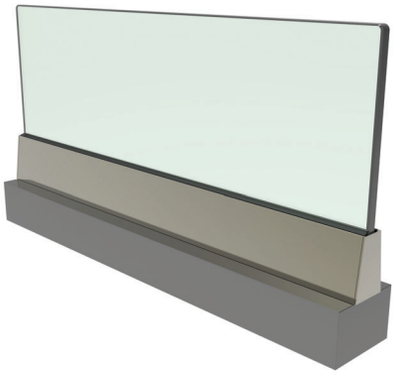

5

GS-14

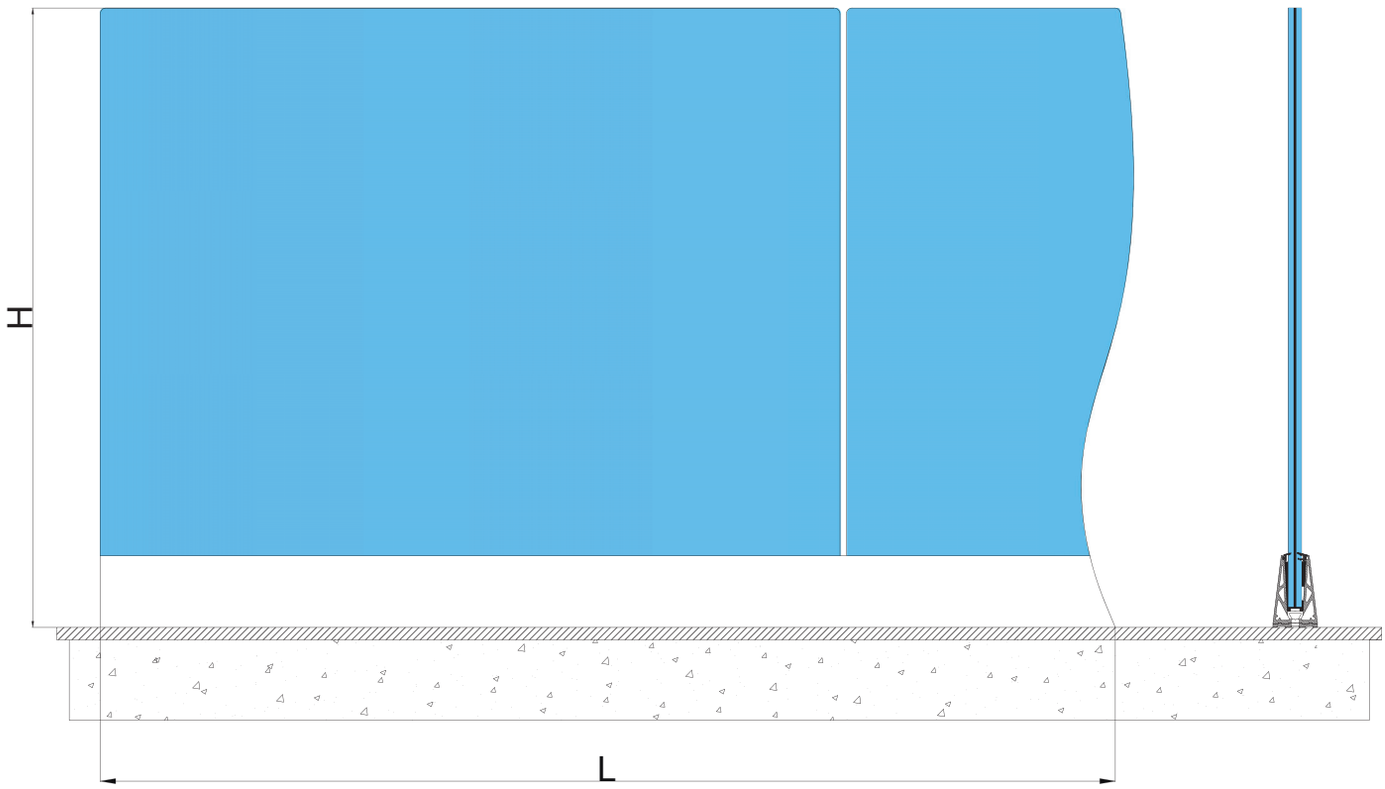

Cam Yüksekliği/H Glass Height/H Hauteur Verre/H Altura De Vidrio/H	Kalınlık (mm) Thickness (mm) Epaisseur (mm) Espesor (mm)	L	(kN)	(J)
0-1200 mm	(8+1,52+8)	3000 mm	5	600
	(10+1,52+10)	3000 mm	6,9	600

MC-404

Cam Yatağı Takımı Üçgen 300 cm (16 - 20 mm Cam)
Triangular Base Profile 300 cm (16-20 mm Glass Thickness)
Profil De Sol Triangle 300 cm (Verre 16-20 mm)
Base Perfil 300 cm (16 -20 mm Vidrio) (Con Cuña Y Parte Plástica Para Apretar El Vidrio)

MC-500

8 - 10 - 12 - 16 - 20 mm Cam Fitili (1 mt)
8 - 10 - 12 - 16 - 20 mm Glass Gasket (1 mt)
8-10-12-16-20 mm Joint D'enjoliveur Pour Verre (1 mt)
8 - 10 - 12 - 16 - 20 mm Goma (1 mt)

MC-501/B

8-10-12-16-20 mm Cam Kama Fitili (1 mt)
8-10-12-16-20 mm Wedge Glass Gasket (1 mt)
8-10-12-16-20 mm Joint De Vitrage Intérieur (1 mt)
8-10-12-16-20 mm Goma (1 mt)

MC-404/A

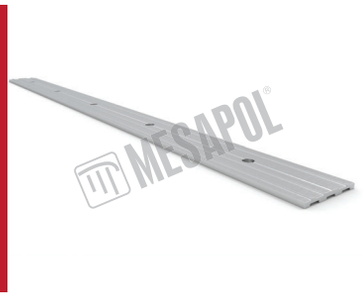

Cam Yatağı Drenaj Profili 300 cm - Küçük
Drainage Profile 300 cm - Small
Drainage Profil De Sol 300 cm
Perfil De Drenaje 300 cm

MC-605

Cam Yatağı Tapası Üçgen
Triangular Base Profile Plug
Embout De Finiton Pour Profil De Sol
Tapa Final Triangulo

M27-48/A

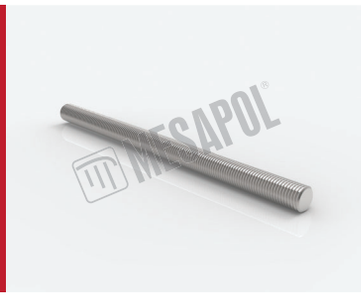

M10 Tijli Çubuk 15 cm
M10 Rod 15 cm
M10 Tige Fileté 15 cm
M10 Barra 15 cm

M27-52

M10 Pul
M10 Washer
Rondelle M10
M10 Arandela

M27-52/A

M10 Flanşlı Somun
M10 Nut And Washer
Ecrou Avec Rondelle M10
M10 Tuerca Con Arandela

M27-57

M10*150 Beton Vidası - Multi Monti
M10*150 Concrete Screw - Multi Monti
Vis Béton M10×150
M10*150 Tornillo Para Hormigón - Multi Monti

MC-610

6 ' Lik Profil Birleştirme Pimi (30 mm)
6 mm Base Profile Interconnector (30 mm)
6 mm Pièce Connecteur Profil De Sol (30 mm)
6 mm Conector Perfil Base (30 mm)

GS-15

Tested

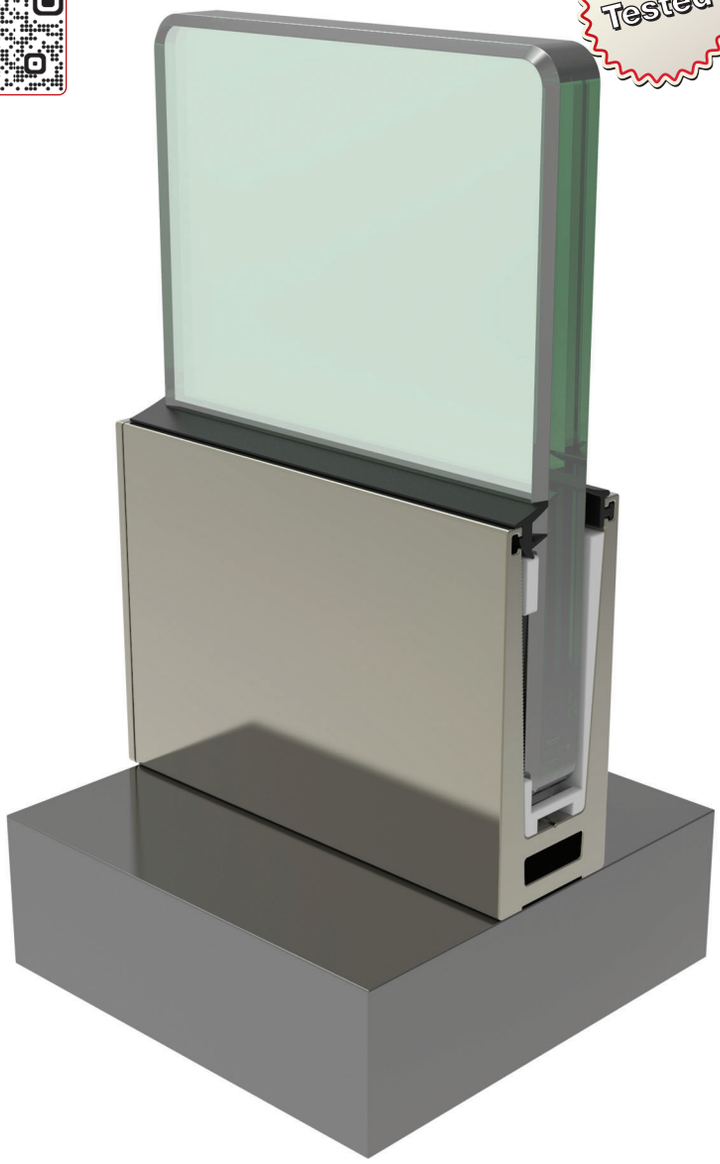

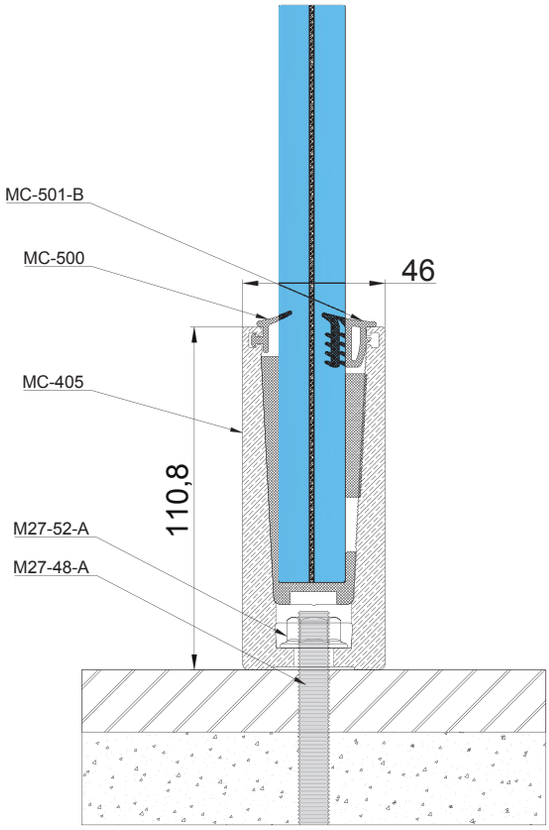
MC-501-B
MC-500
46
MC-405
110,8
M27-52-A
M27-48-A

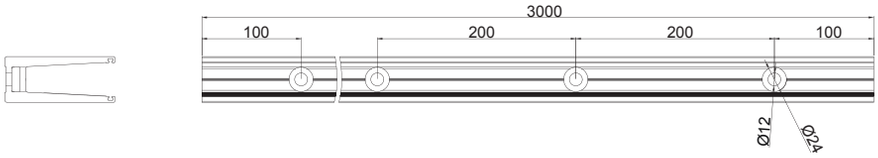
3000
100
200
200
100
Ø12
Ø24

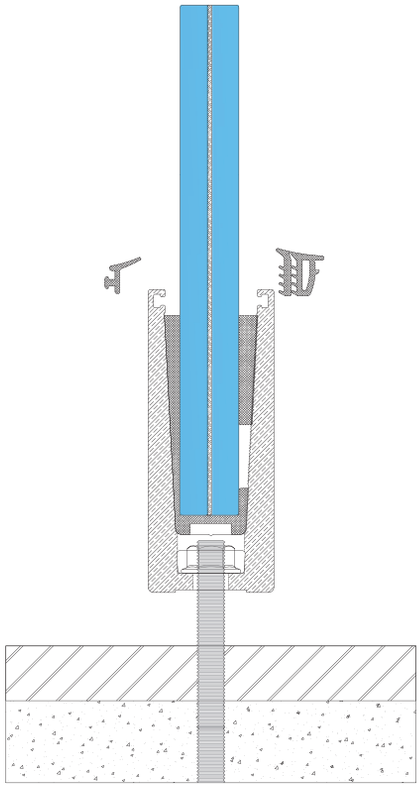

GS-15

Tested

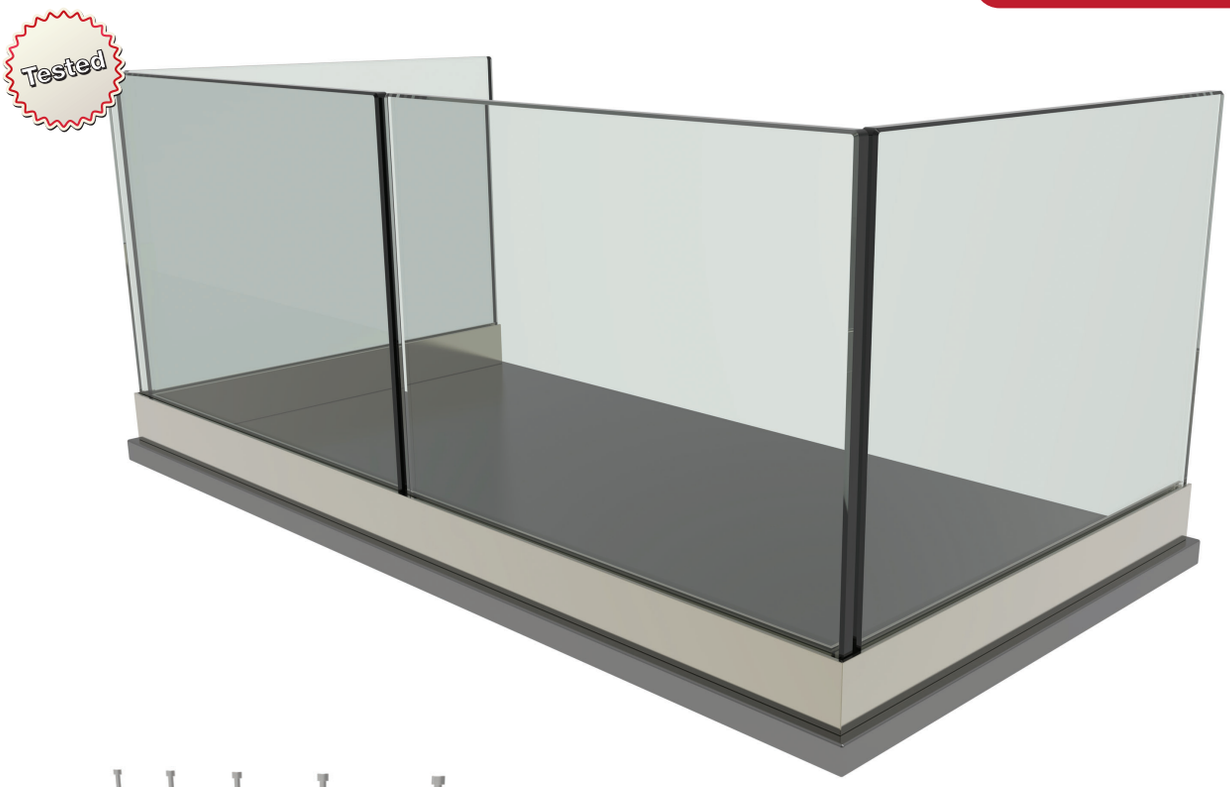

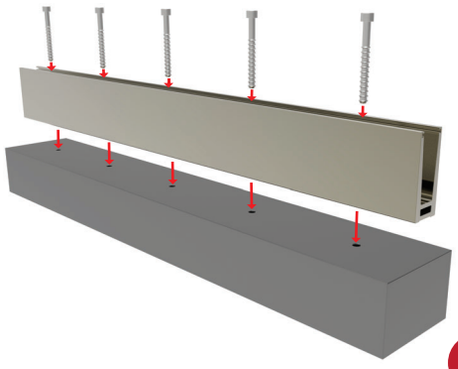

1

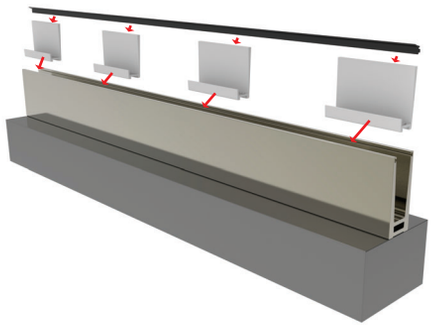

2

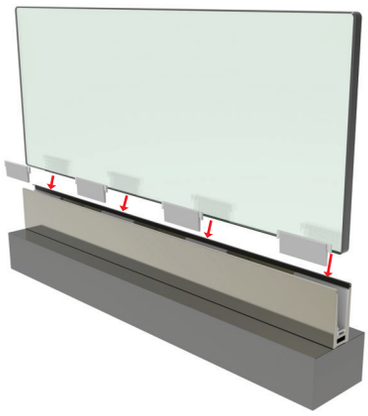

3

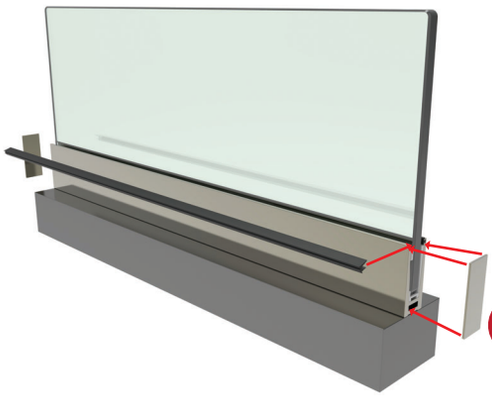

4

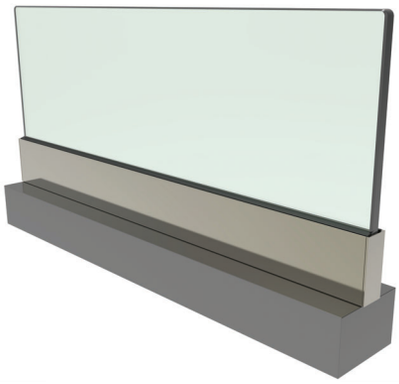

5

GS-15

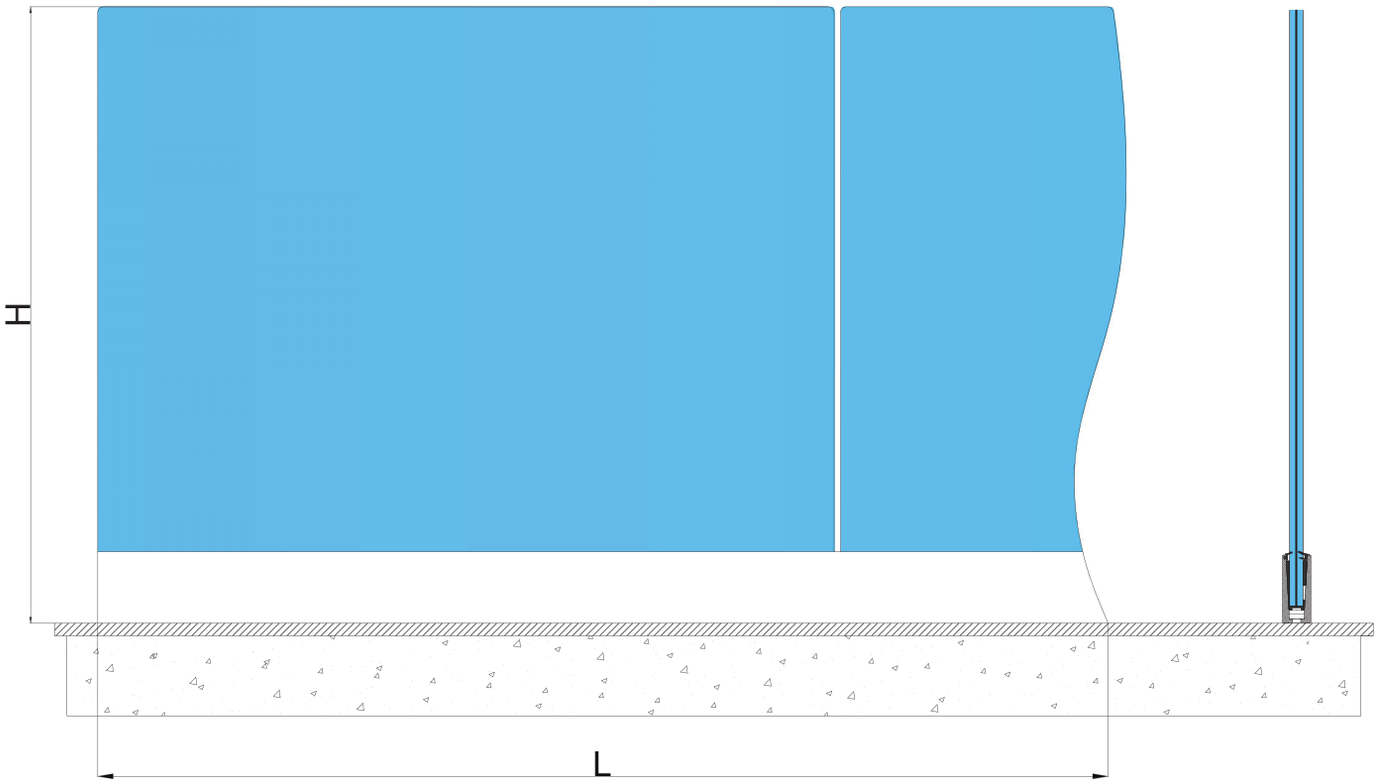

Cam Yüksekliği/H Glass Height/H Hauteur Verre/H Altura De Vidrio/H	Kalınlık (mm) Thickness (mm) Epaisseur (mm) Espesor (mm)	L	(kN)	(J)
0-1200 mm	**(8+1,52+8)**,(10+1,52+10)	3000 mm	4,7	600

MC-405

Cam Yatağı Takımı 300 cm (16 - 20 mm Cam)
Base Profile 300 cm (16 - 20 mm Glass Thickness)
Profil De Sol 300 cm (Verre 16-20 mm)
Base Perfil 300 cm (16 -20 mm Vidrio) (Con Cuña Y Parte Plástica Para Apretar El Vidrio)

MC-500

8 - 10 - 12 - 16 - 20 mm Cam Fitili (1 mt)
8 - 10 - 12 - 16 - 20 mm Glass Gasket (1 mt)
8-10-12-16-20 mm Joint D'enjoliveur Pour Verre (1 mt)
8 - 10 - 12 - 16 - 20 mm Goma (1 mt)

MC-501/B

8-10-12-16-20 mm Cam Kama Fitili (1 mt)
8-10-12-16-20 mm Wedge Glass Gasket (1 mt)
8-10-12-16-20 mm Joint De Vitrage Intérieur (1 mt)
8-10-12-16-20 mm Goma (1 mt)

MC-606

Cam Yatağı Tapası
Base Profile Plug
Embout De Finiton Pour Profil De Sol
Tapa Final

M27-48/A

M10 Tijli Çubuk 15 cm
M10 Rod 15 cm
M10 Tige Fileté 15 cm
M10 Barra 15 cm

M27-52

M10 Pul
M10 Washer
Rondelle M10
M10 Arandela

M27-52/A

M10 Flanşlı Somun
M10 Nut And Washer
Ecrou Avec Rondelle M10
M10 Arandela

M27-57

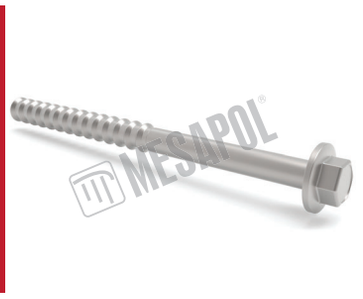

M10*150 Beton Vidası - Multi Monti
M10*150 Concrete Screw - Multi Monti
Vis Béton M10×150
M10*150 Tornillo Para Hormigón - Multi Monti

GS-16

Tested

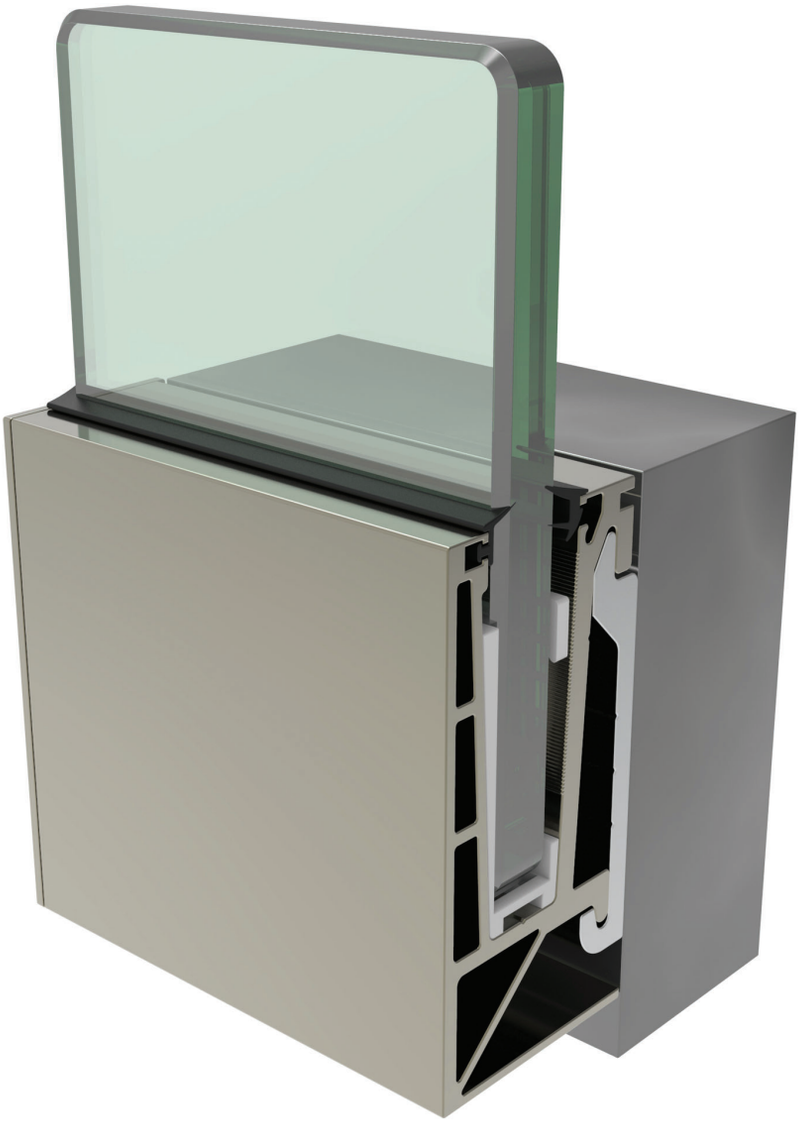

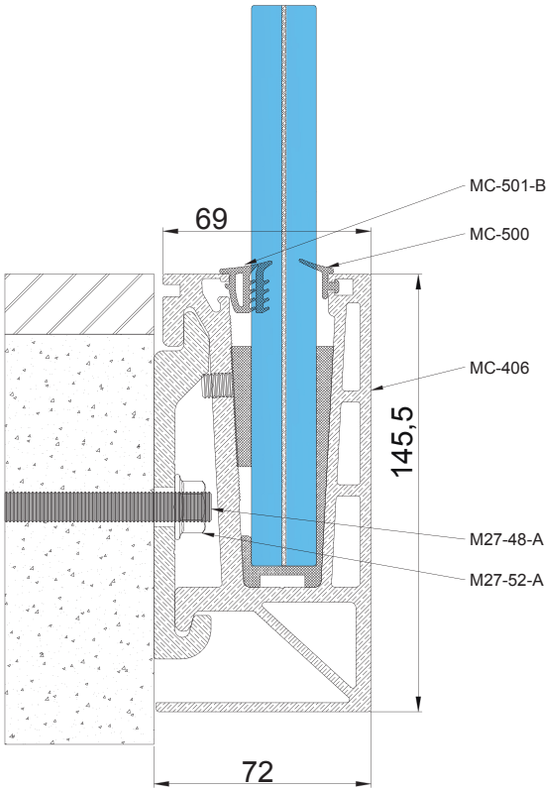
MC-501-B
MC-500
69
MC-406
145,5
M27-48-A
M27-52-A
72

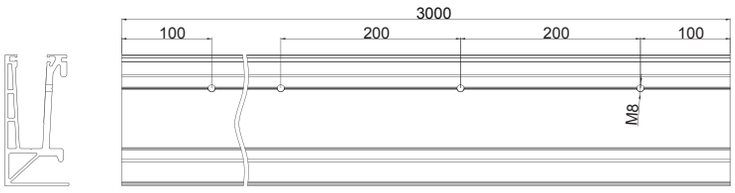
3000
100
200
200
100
M8

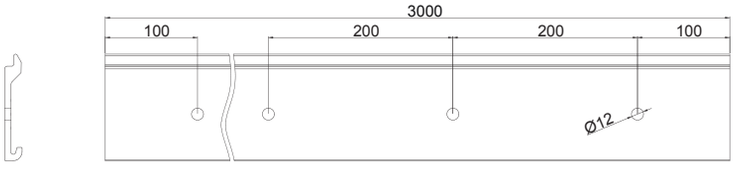
3000
100
200
200
100
Ø12

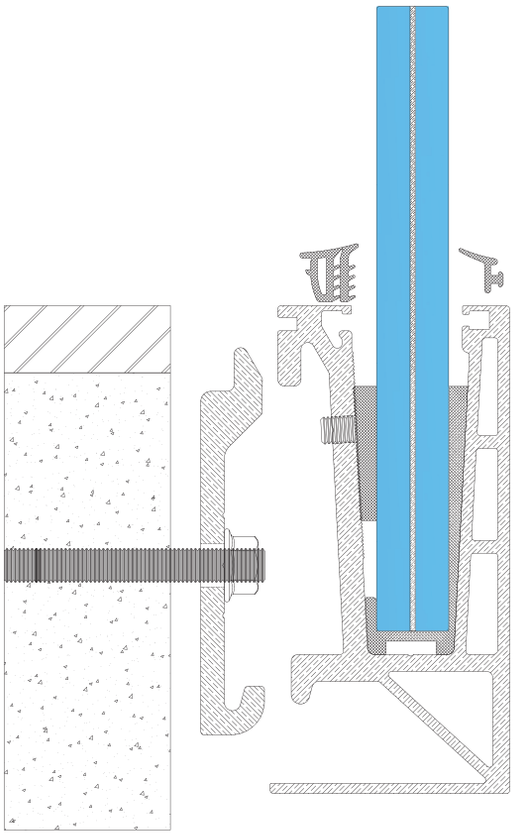

GS-16

Tested

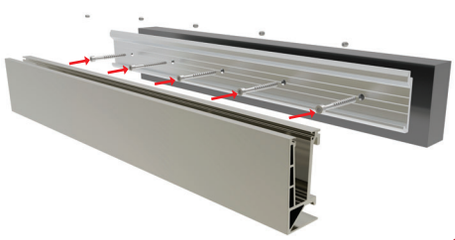

1

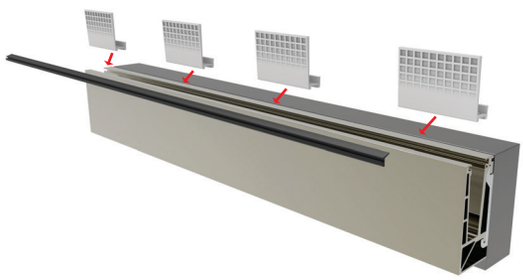

2

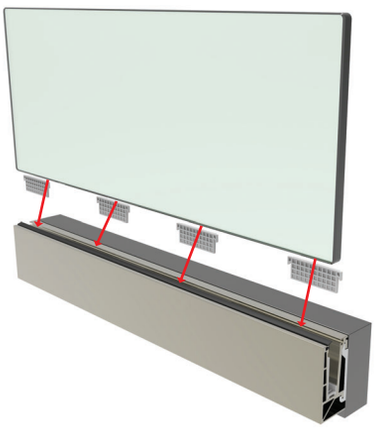

3

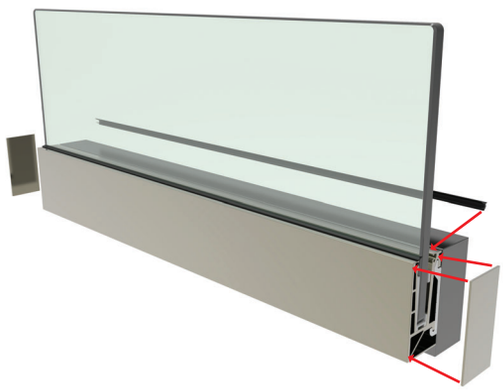

4

5

GS-16

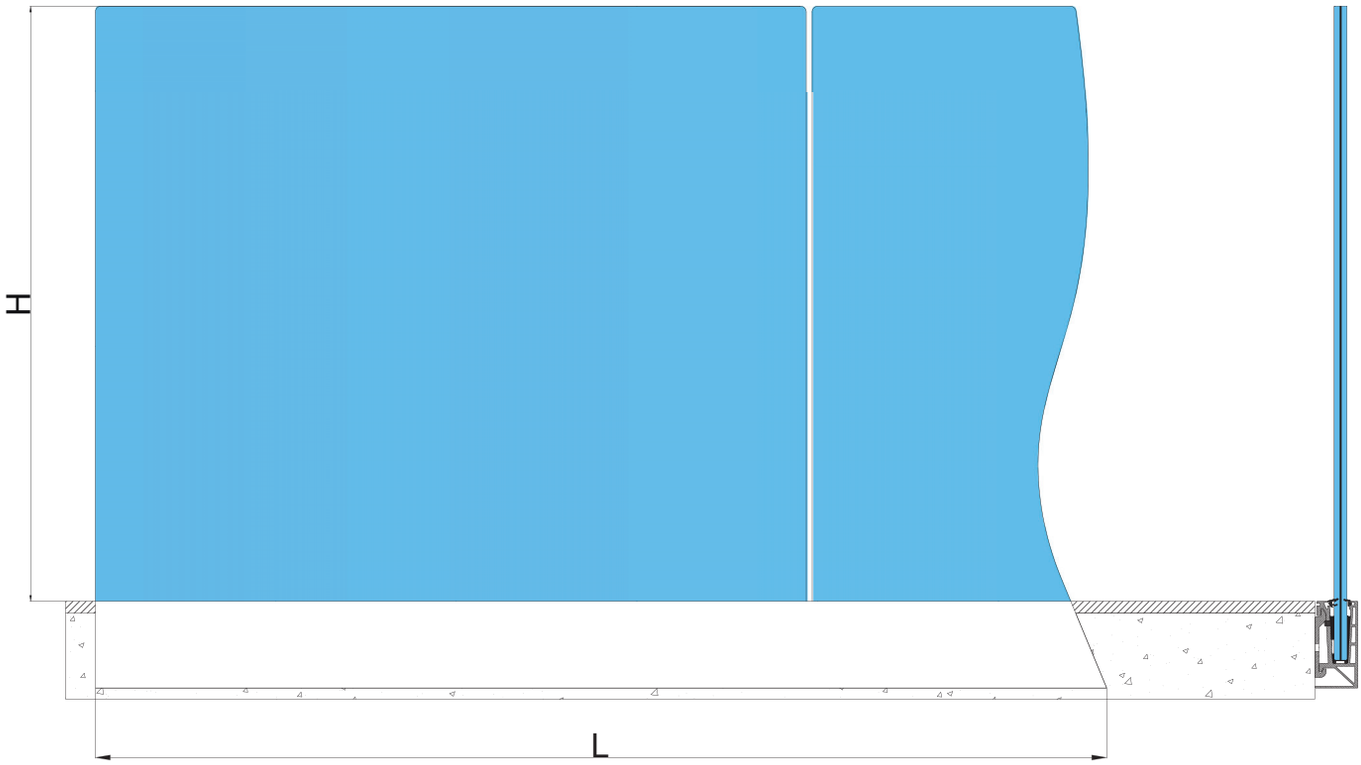

Cam Yüksekliği/H Glass Height/H Hauteur Verre/H Altura De Vidrio/H	Kalınlık (mm) Thickness (mm) Epaisseur (mm) Espesor (mm)	L	(kN)	(J)
0-1200 mm	**(8+1,52+8)**,(10+1,52+10)	3000 mm	2,4	600

MC-406

Cam Yatağı Takımı Yandan 300 cm (16-20 mm Cam)
Lateral Base Profile 300 cm (16-20 mm Glass Thickness)
Profil De Sol Fixation Latérale 300 cm (Verre 16-20 mm)
Base Perfil 300 cm (16 -20 mm Vidrio) (Con Cuña Y Parte Plástica Para Apretar El Vidrio)

MC-500

8 - 10 - 12 - 16 - 20 mm Cam Fitili (1 mt)
8 - 10 - 12 - 16 - 20 mm Glass Gasket (1 mt)
8-10-12-16-20 mm Joint D'enjoliveur Pour Verre (1 mt)
8 - 10 - 12 - 16 - 20 mm Goma (1 mt)

MC-501/B

8-10-12-16-20 mm Cam Kama Fitili (1 mt)
8-10-12-16-20 mm Wedge Glass Gasket (1 mt)
8-10-12-16-20 mm Joint De Vitrage Intérieur (1 mt)
8-10-12-16-20 mm Goma (1 mt)

MC-607

Cam Yatağı Tapası Yandan
Lateral Base Profile Plug
Embout De Finiton Pour Profil De Sol
Tapa Final

M27-48/A

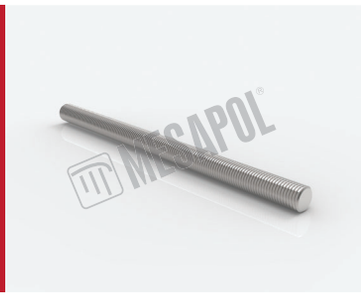

M10 Tijli Çubuk 15 cm
M10 Rod 15 cm
M10 Tige Fileté 15 cm
M10 Barra 15 cm

M27-52

M10 Pul
M10 Washer
Rondelle M10
M10 Arandela

M27-52/A

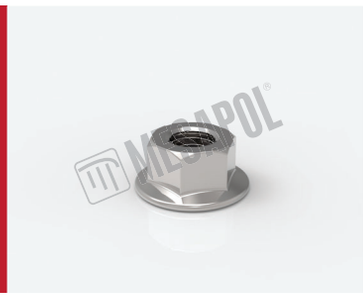

M10 Flanşlı Somun
M10 Nut And Washer
Ecrou Avec Rondelle M10
M10 Tuerca Con Arandela

M27-57

M10*150 Beton Vidası - Multi Monti
M10*150 Concrete Screw - Multi Monti
Vis Béton M10×150
M10*150 Tornillo Para Hormigón - Multi Monti

GS-17

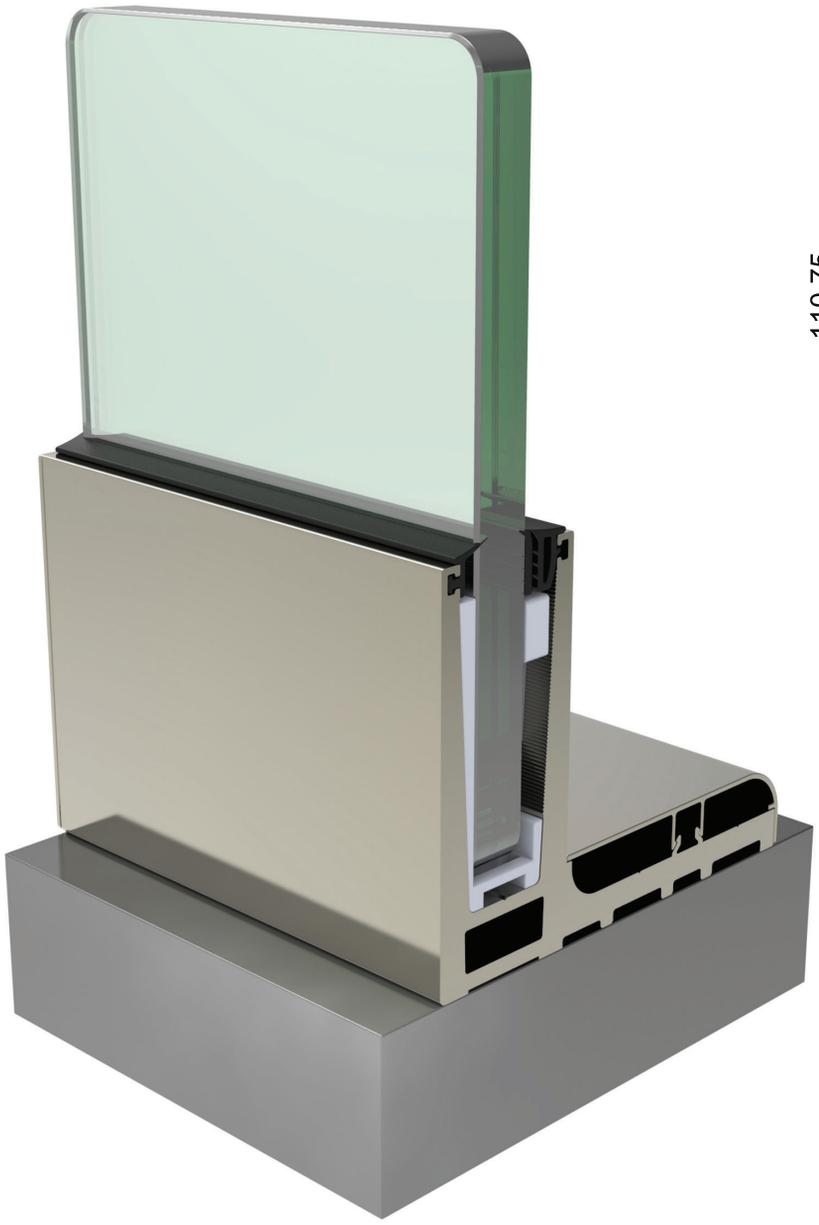

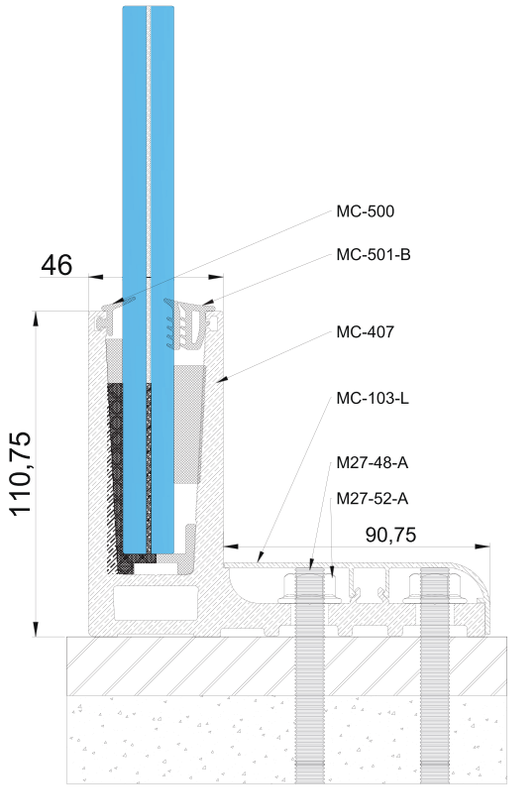
MC-500
MC-501-B
46
MC-407
MC-103-L
110,75
M27-48-A
M27-52-A
90,75

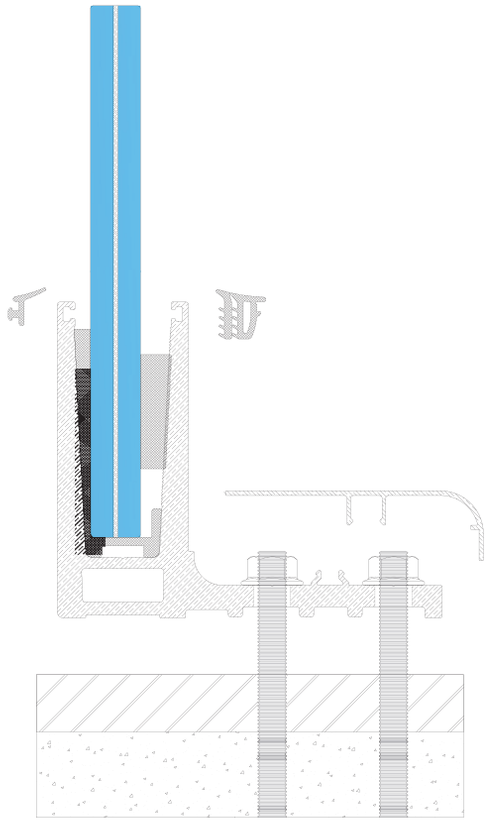

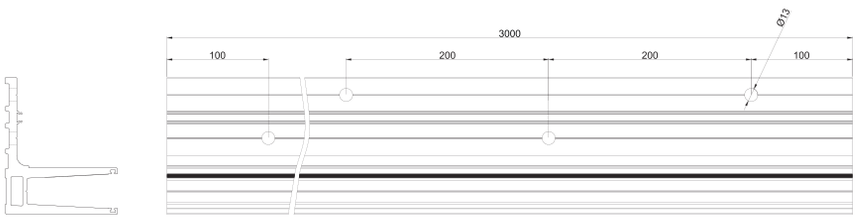
3000
100
200
200
100
Ø13

GS-17

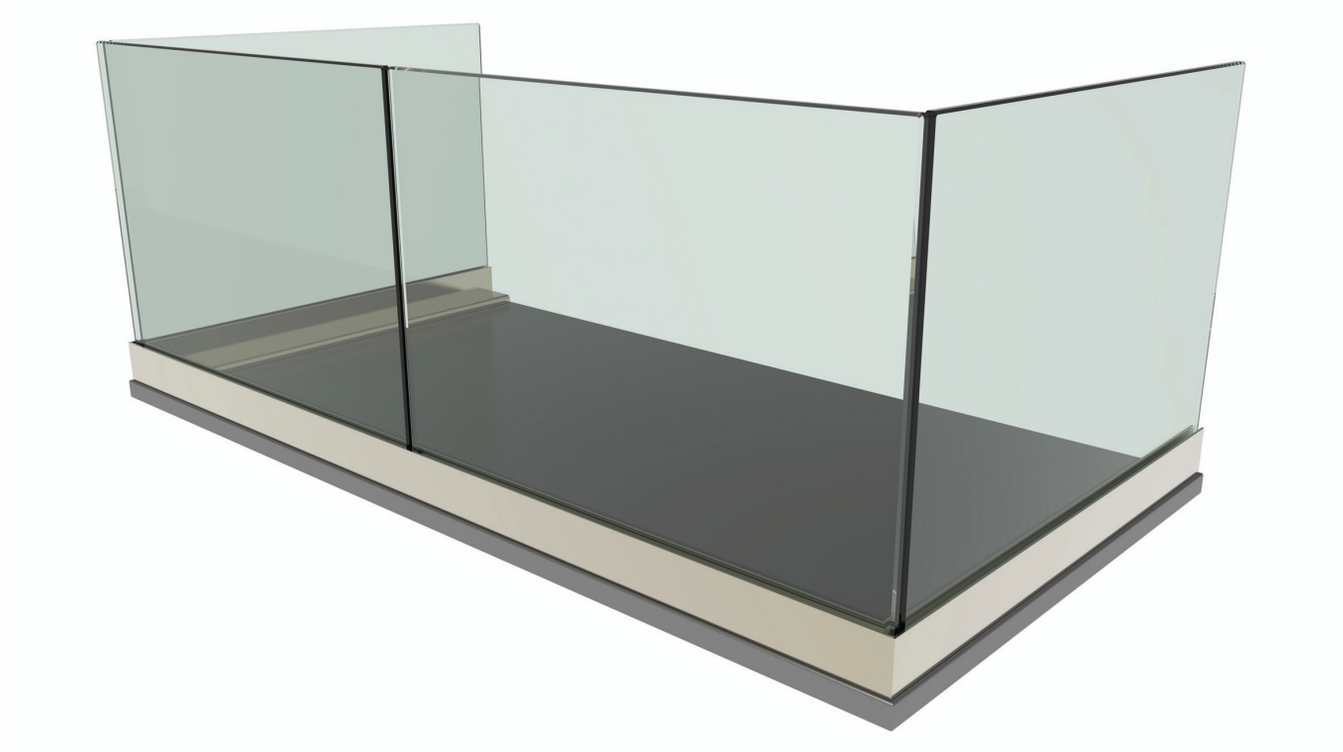

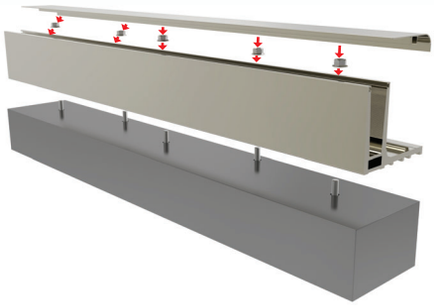

1

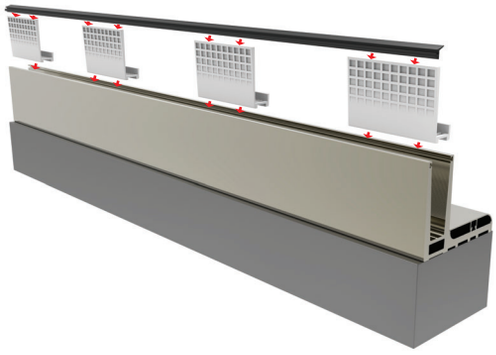

2

3

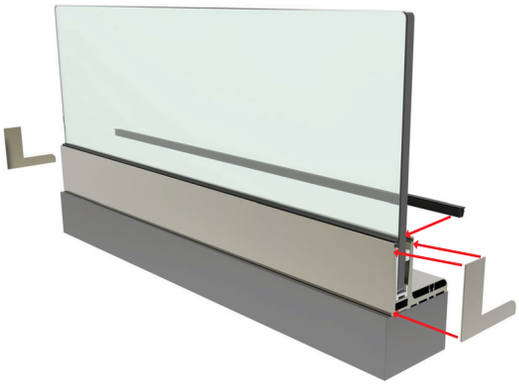

4

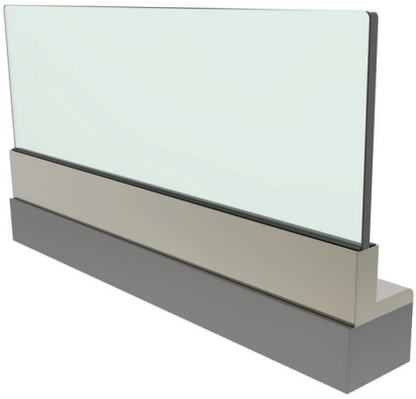

5

GS-17

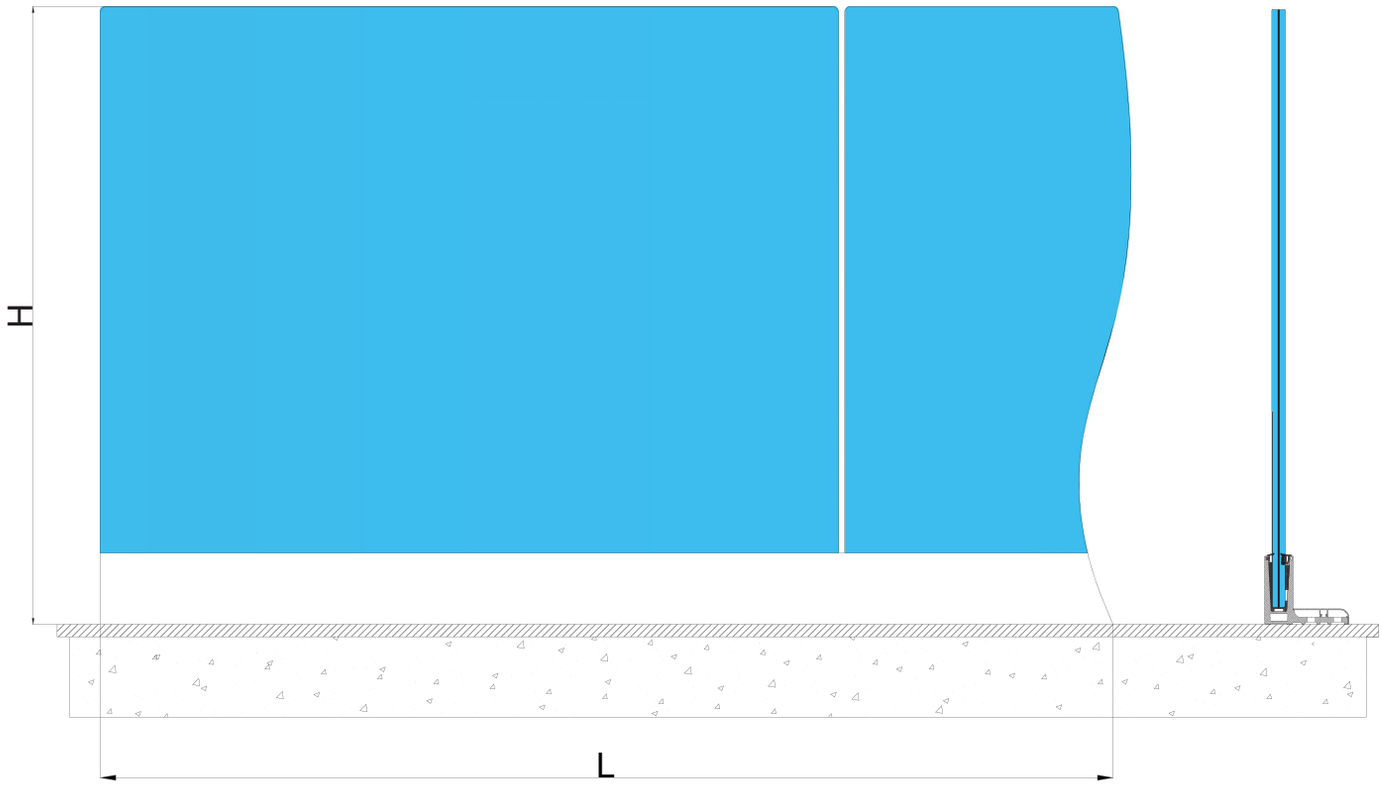

Cam Yüksekliği/H Glass Height/H Hauteur Verre/H Altura De Vidrio/H	Kalınlık (mm) Thickness (mm) Epaisseur (mm) Espesor (mm)	L	(kN)	(J)
0-1200 mm	(8+1,52+8)	3000 mm	5,6	600
	(10+1,52+10)		4,3	600

MC-407

L Cam Yatağı Takımı 300 cm (16 - 20 mm Cam)
(L Shape) Base Profile 300 cm (16 - 20 mm Glass Thickness)
Profil De Sol Fixation Déporté 300 cm (Verre 16-20 mm)
Base Perfil 300 cm (16 -20 mm Vidrio) (Con Cuña Y Parte Plástica Para Apretar El Vidrio)

MC-103/L

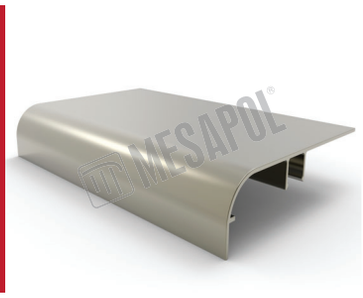

L Cam Yatağı Kapağı (3,40 kg / 6 mt)
L Shape Base Profile Cover (3,40 kg / 6 mt)
Enjoliveur Pour Profil De Sol Déporté (3,40 kg / 6 mt)
Tapa Lateral Para Base L (3,40 kg / 6 mt)

MC-500

8 - 10 - 12 - 16 - 20 mm Cam Fitili (1 mt)
8 - 10 - 12 - 16 - 20 mm Glass Gasket (1 mt)
8-10-12-16-20 mm Joint D'enjoliveur Pour Verre (1 mt)
8 - 10 - 12 - 16 - 20 mm Goma (1 mt)

MC-501/B

8-10-12-16-20 mm Cam Kama Fitili (1 mt)
8-10-12-16-20 mm Wedge Glass Gasket (1 mt)
8-10-12-16-20 mm Joint De Vitrage Intérieur (1 mt)
8-10-12-16-20 mm Goma (1 mt)

MC-607/A

L Cam Yatağı Tapası
(L Shape) Base Profile Plug
Embout De Finition Pour Profil De Sol
Tapa Final Para Perfil Base L

M27-48/A

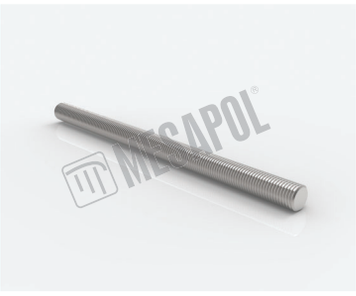

M10 Tijli Çubuk 15 cm
M10 Rod 15 cm
M10 Tige Fileté 15 cm
M10 Barra 15 cm

M27-52

M10 Pul
M10 Washer
Rondelle M10
M10 Arandela

M27-52/A

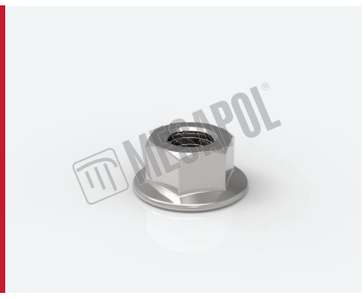

M10 Flanşlı Somun
M10 Nut And Washer
Ecrou Avec Rondelle M10
M10 Tuerca Con Arandela

M27-57

M10*150 Beton Vidası - Multi Monti
M10*150 Concrete Screw - Multi Monti
Vis Béton M10×150
M10*150 Tornillo Para Hormigón - Multi Monti

GS-18

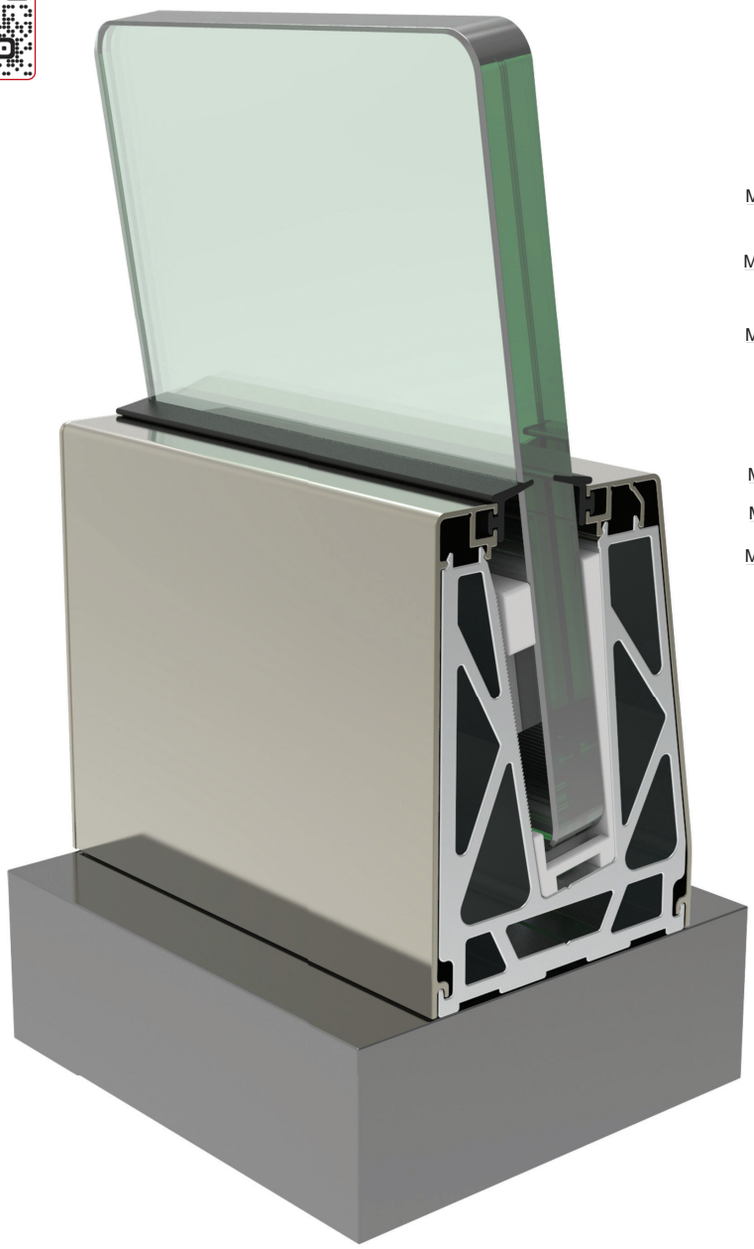

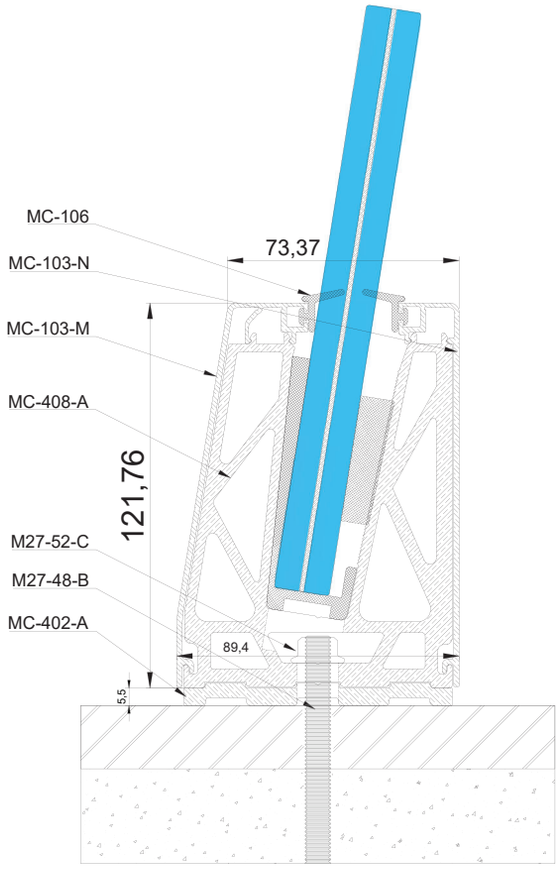
MC-106
MC-103-N
MC-103-M
MC-408-A
M27-52-C
M27-48-B
MC-402-A
73,37
121,76
89,4
5,5

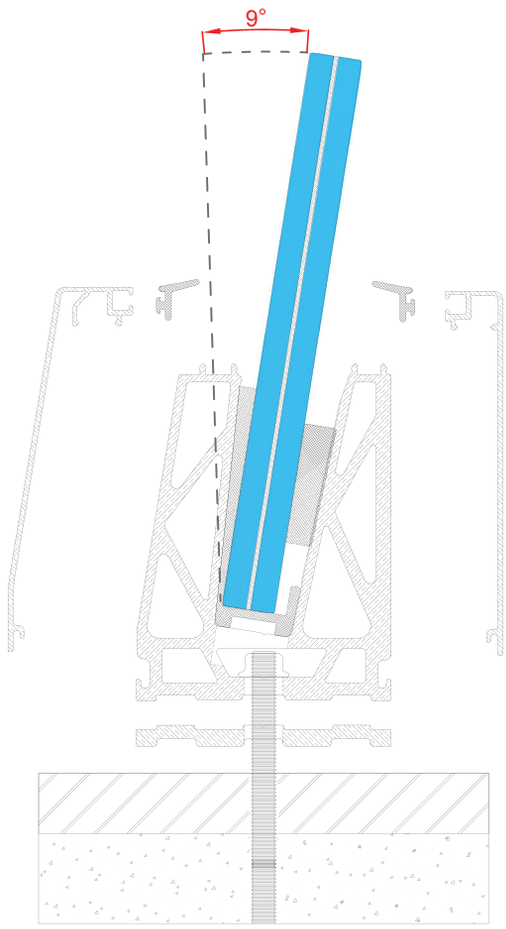
9°

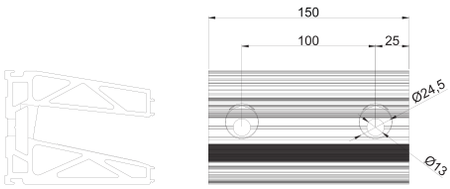
150
100
25
Ø24,5
Ø13

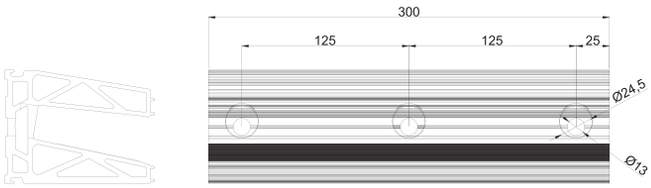
300
125
125
25
Ø24,5
Ø13

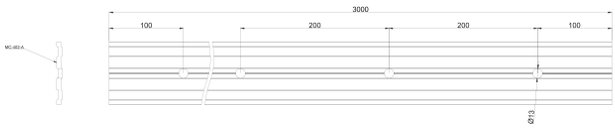
3000
100
200
200
100
MC-402-A
Ø13

GS-18

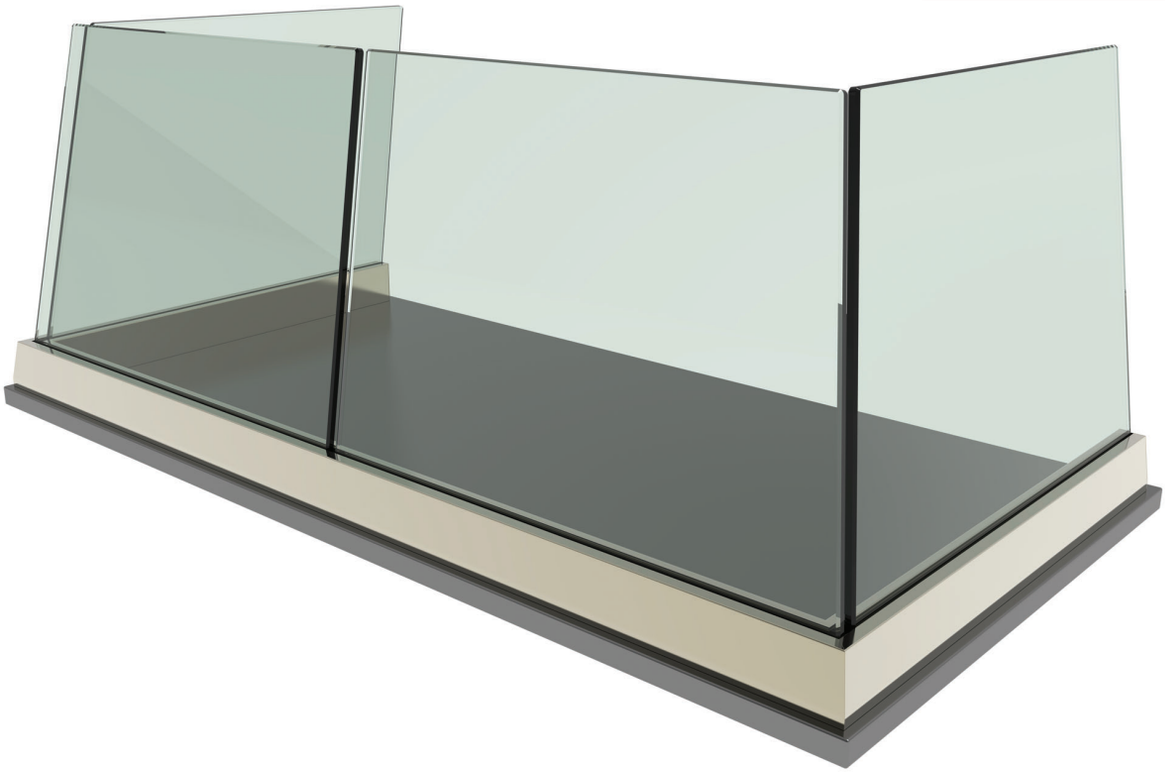

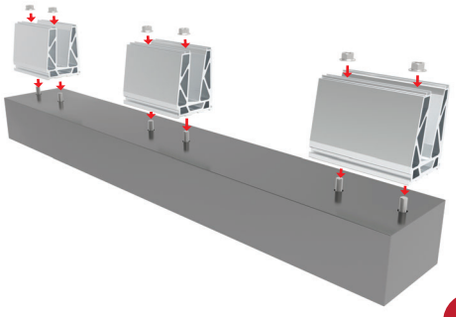

1

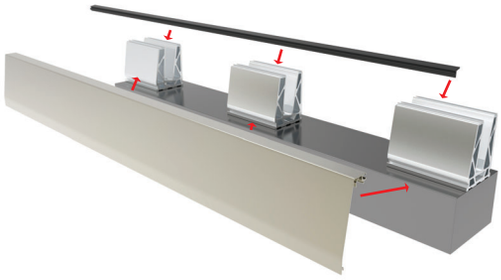

2

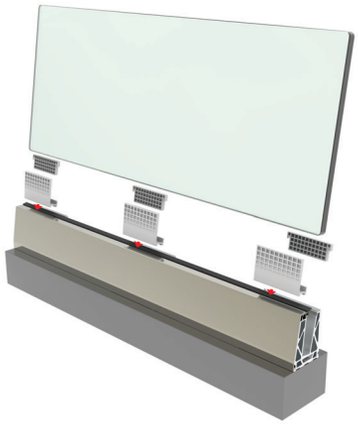

3

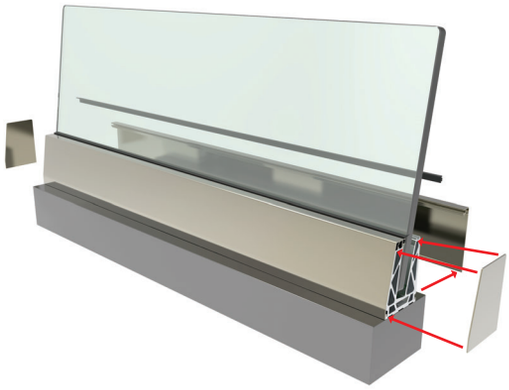

4

5

GS-18

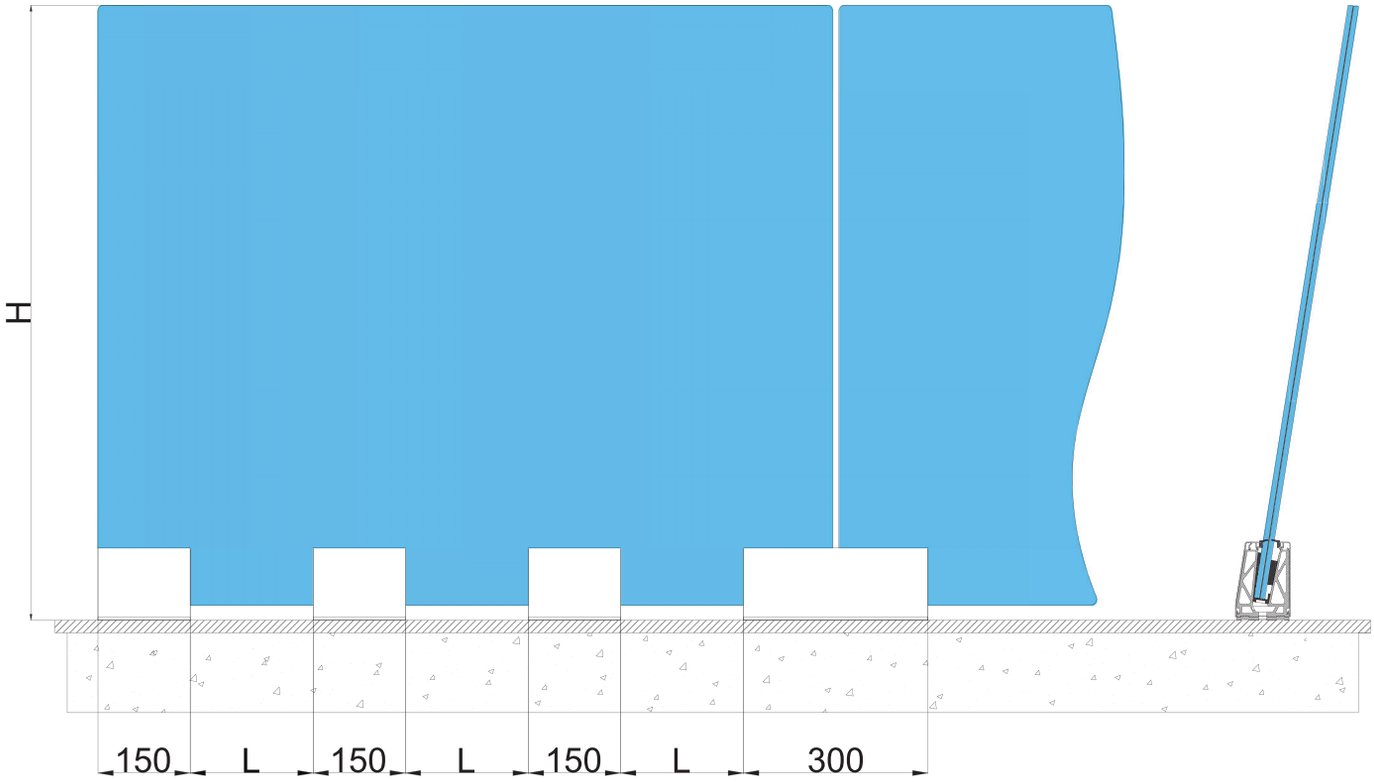

Cam Yüksekliği/H Glass Height/H Hauteur Verre/H Altura De Vidrio/H	Kalınlık (mm) Thickness (mm) Epaisseur (mm) Espesor (mm)	L	(kN)	(J)
0-599 mm	(8+1,52+8),(10+1,52+10)	500 mm	-	-
600-899 mm	(8+1,52+8),(10+1,52+10)	400 mm	-	-
900-1099 mm	(8+1,52+8),(10+1,52+10)	300 mm	-	-
1100-1200 mm	(8+1,52+8)	266 mm	5,1	600
	(10+1,52+10)		5,3	600

*Bina yüksekliğine göre kullanılacak cam kalınlığı ve ürün aralığı değişkenlik gösterebilir.
*Depending on the building's height the measurements and standards may change
*Les épaisseurs de verre et les entraxe peuvent varier selon la hauteur du batiment.
*Dependiendo de la altura del edificio, las medidas y las estandares pueden cambiar

MC-408/A

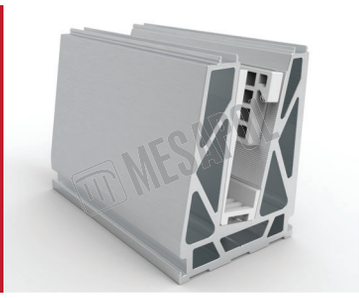

Açılı Cam Yatağı Takımı 15 cm (16 - 20 mm Cam)
Angled Glass Base Profile 15 cm (16 - 20 mm Glass Thickness)
Kit Profil De Sol Réglage De L'aplomb Du Verre (88.2 / 1010.4) L = 15 cm
Base Perfil Inclinada 15 cm (16 - 20 mm Vidrio)

MC-408/B

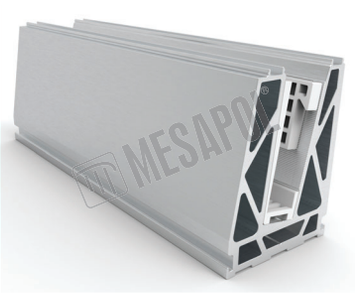

Açılı Cam Yatağı Takımı 30 cm (16 - 20 mm Cam)
Angled Glass Base Profile 30 cm (16 - 20 mm Glass Thickness)
Kit Profil De Sol Réglage De L'aplomb Du Verre (88.2 / 1010.4) L = 30 cm
Base Perfil Inclinada 30 cm (16 - 20 mm Vidrio)

MC-103/M

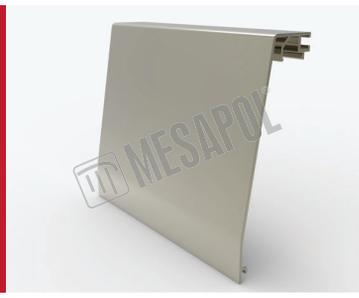

Açılı Cam Yatağı Kapağı Açılı (5,00 kg / 6 mt)
Angled Glass Base Profile Cover (5,00 kg / 6 mt)
Enjoliveur Incliné Profil De Sol (5,00 kg / 6 mt)
Perfil Lateral Angulado Para Bases (5,00 kg / 6 mt)

MC-103/N

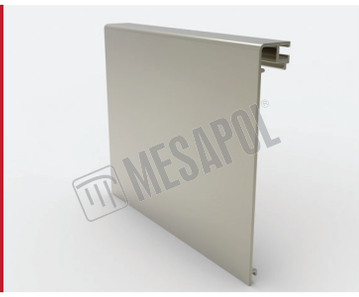

Açılı Cam Yatağı Kapağı Düz (4,60 kg / 6 mt)
Angled Glass Base Profile Cover (4,60 kg / 6 mt)
Enjoliveur Droit Profil De Sol (4,60 kg / 6 mt)
Perfil Lateral Para Bases (4,60 kg / 6 mt)

MC-106

10-12-16 mm Cam İçin Kapak Fitili (1 mt)
10-12-16 mm Glass Gasket For Profile Cover (1 mt)
10-12-16 mm Joint D'enjoliveur Pour Verre (1 mt)
10-12-16 mm Goma De Vidrio (1 mt)

MC-402/A

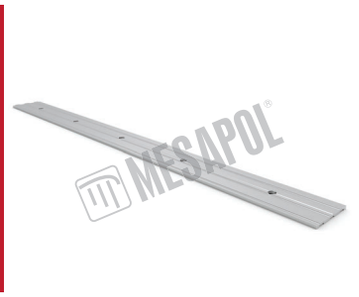

Cam Yatağı Drenaj Profili 300 cm - Büyük
Drainage Profile 300 cm - Big
Drainage Pour Profil De Sol 300 cm
Perfil De Drenaje 300 cm

MC-607/B

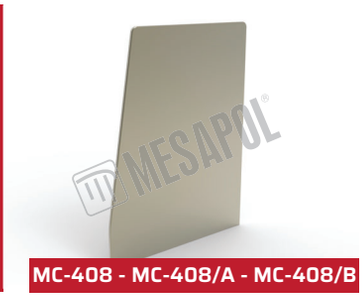

Açılı Cam Yatağı Tapası
Angled Glass Base Profile Plug
Embout De Finiton Pour Profil De Sol
Tapa Final

M27-48/B

M08 Tijli Çubuk 15 cm
M08 Rod 15 cm
M08 Tige Fileté 15 cm
M08 Barra 15 cm

M27-52/C

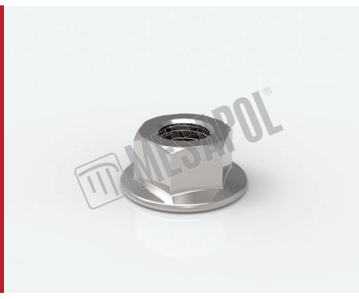

M08 Flanşlı Somun
M08 Nut And Washer
Ecrou Avec Rondelle M08
M08 Tuerca Con Arandela

GS-18/L

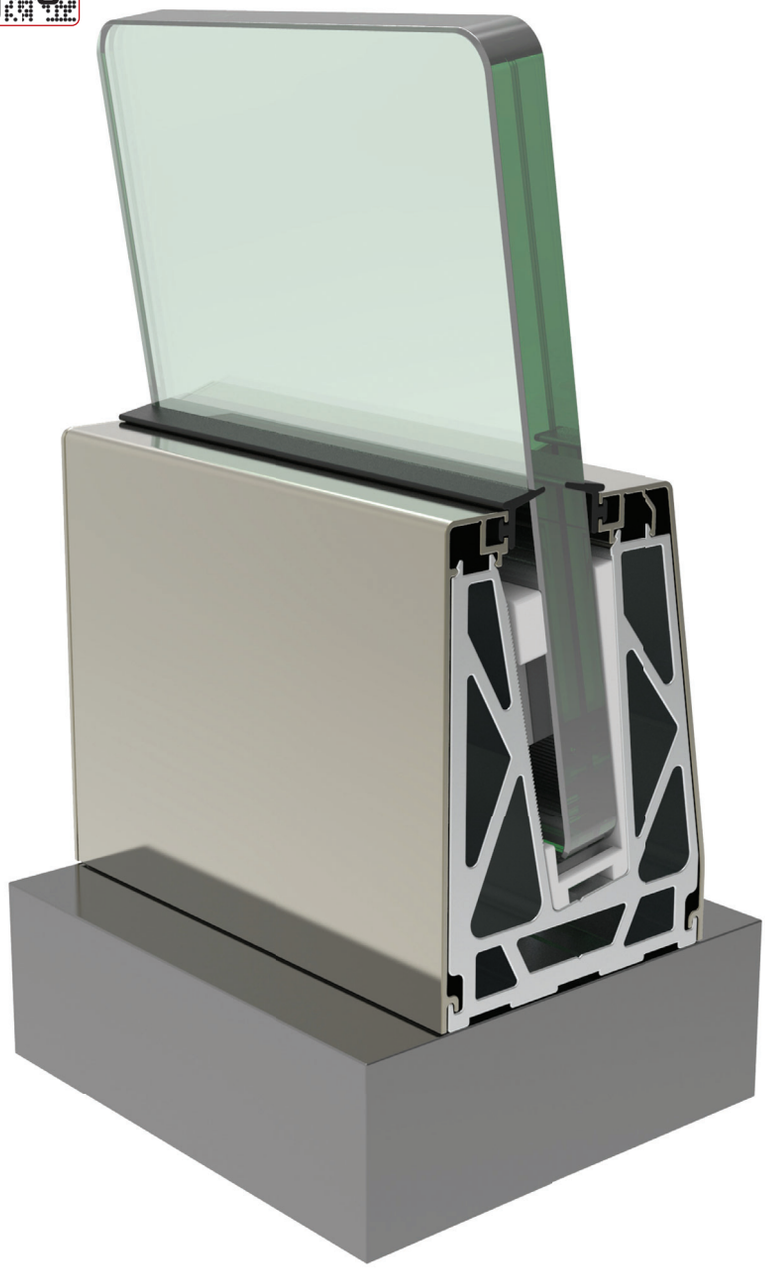

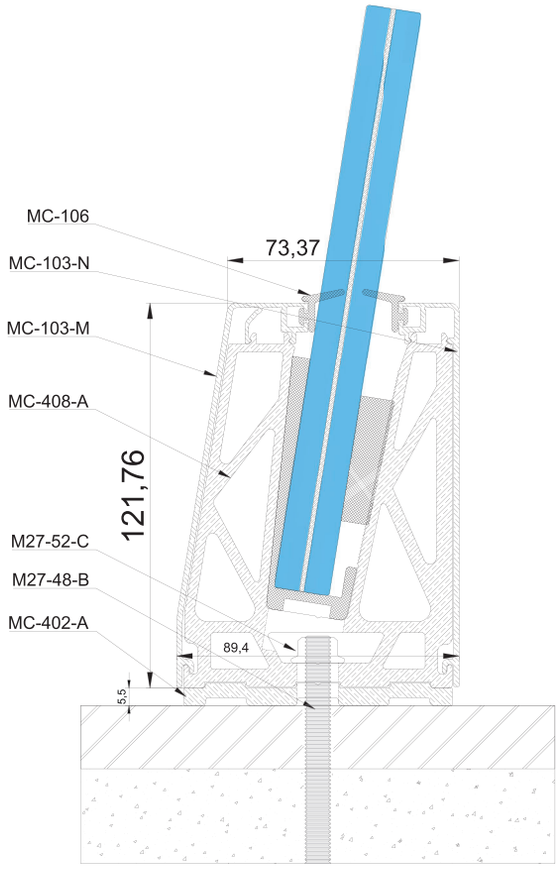
MC-106
MC-103-N
MC-103-M
MC-408-A
M27-52-C
M27-48-B
MC-402-A
73,37
121,76
89,4
5,5

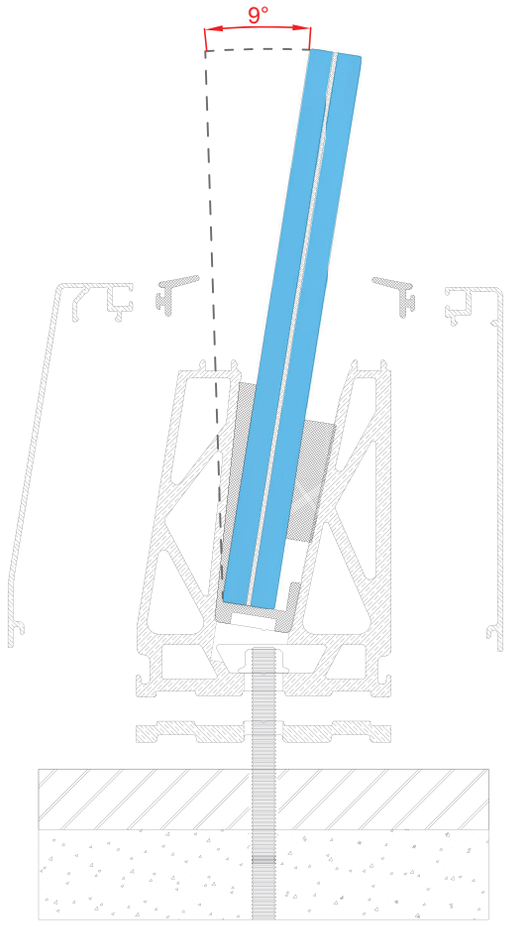
9°

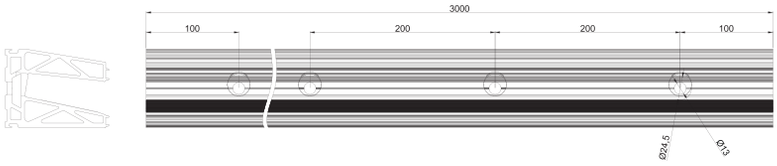
3000
100
200
200
100
Ø24,5
Ø13

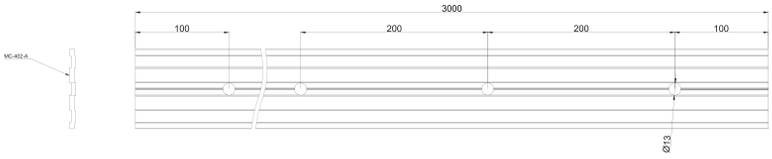
3000
100
200
200
100
MC-402-A
Ø13

GS-18/L

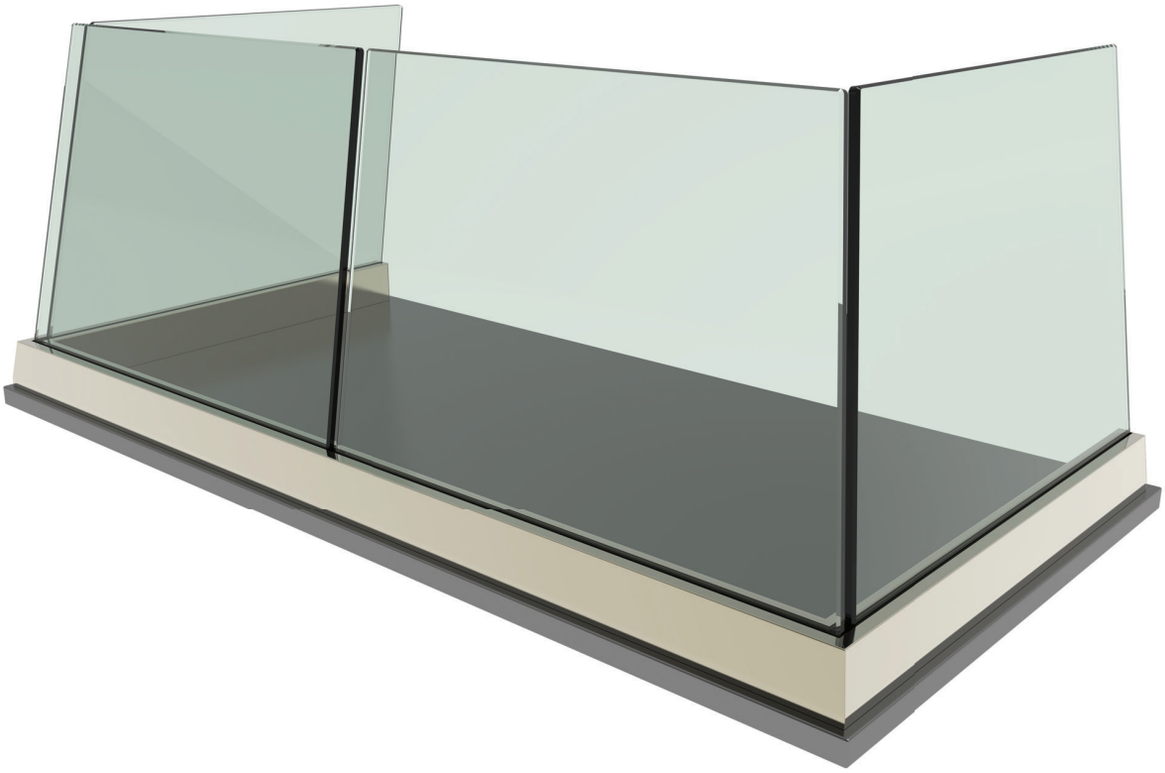

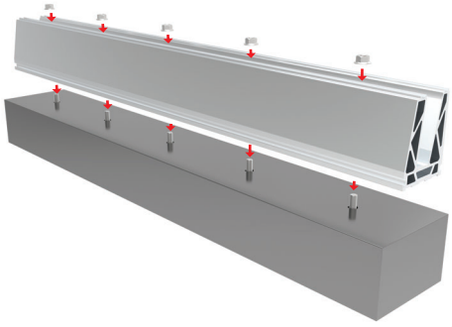

1

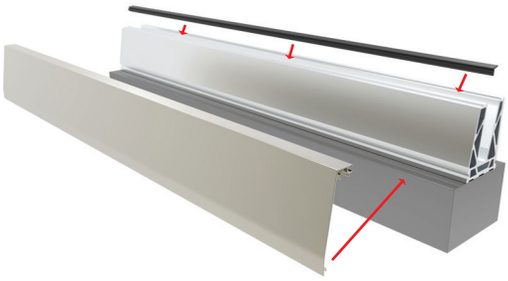

2

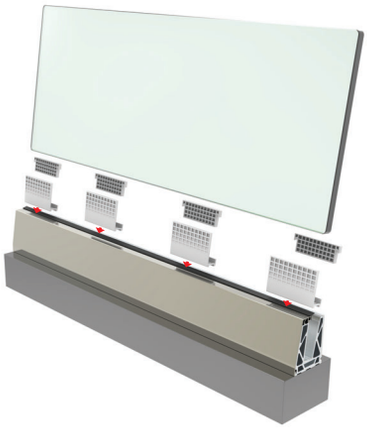

3

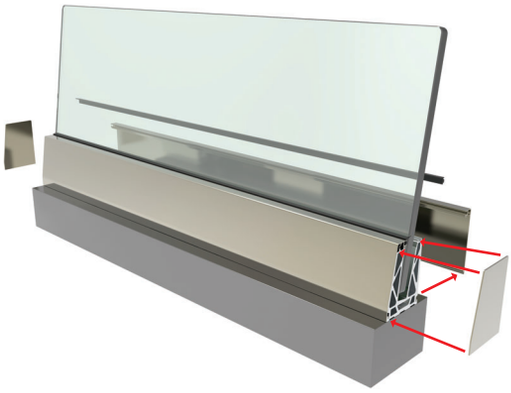

4

5

GS-18/L

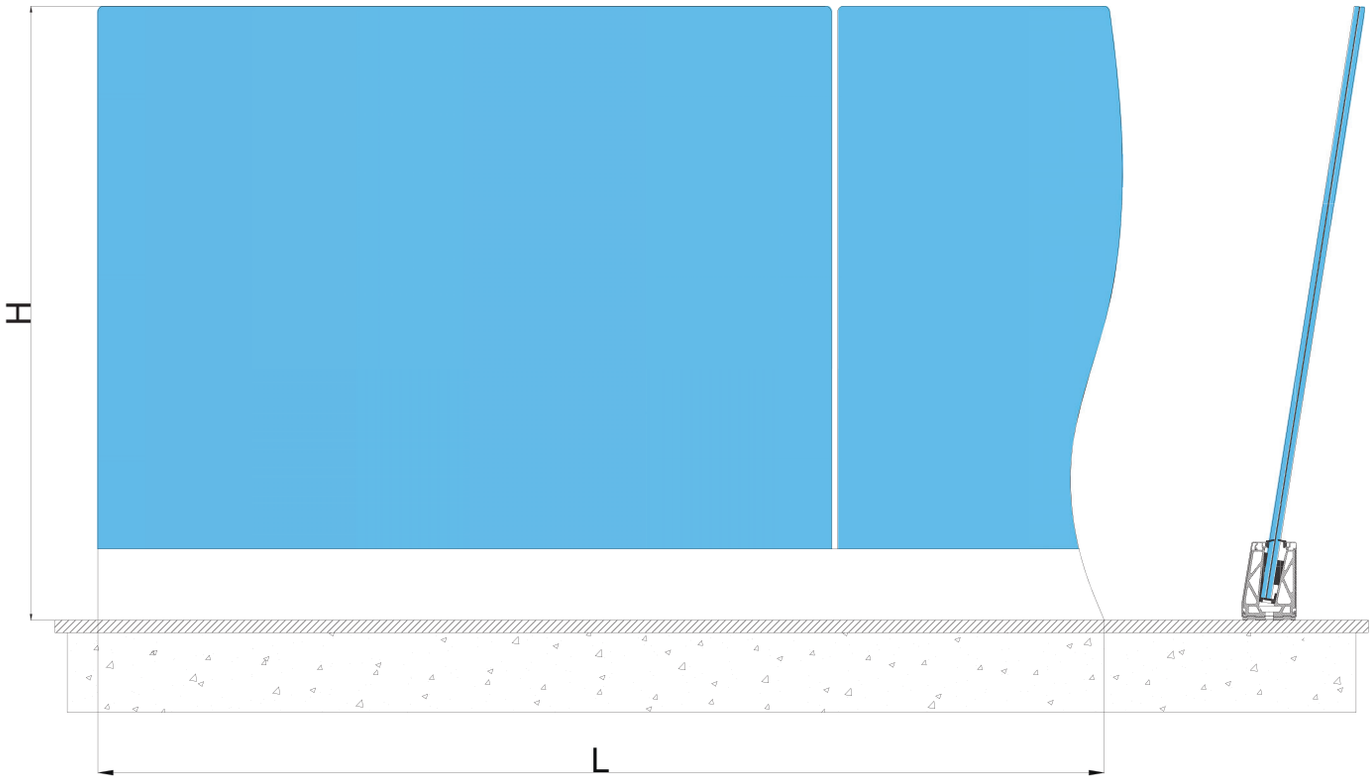

Cam Yüksekliği/H Glass Height/H Hauteur Verre/H Altura De Vidrio/H	Kalınlık (mm) Thickness (mm) Epaisseur (mm) Espesor (mm)	L	(kN)	(J)
0-1200 mm	(8+1,52+8)	3000 mm	5,1	600
	(10+1,52+10)		6,4	600

MC-408

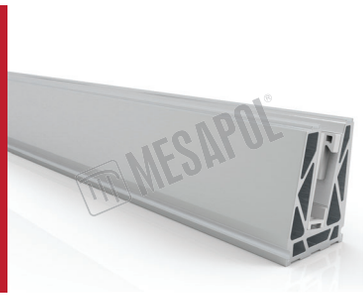

Açılı Cam Yatağı Takımı 300 cm (16 - 20 mm Cam)
Angled Glass Base Profile 300 cm (16 - 20 mm Glass Thickness)
Profil De Sol Incliné L= 300 cm (Verre 16-20 mm)
Base Perfil Inclinada 300 cm (16 - 20 mm Vidrio)

MC-103/M

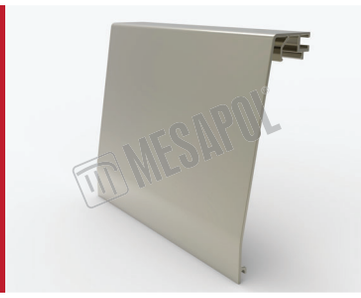

Açılı Cam Yatağı Kapağı Açılı (5,00 kg / 6 mt)
Angled Glass Base Profile Cover (5,00 kg / 6 mt)
Enjoliveur Incliné Profil De Sol (5,00 kg / 6 mt)
Perfil Lateral Angulado Para Bases (5,00 kg / 6 mt)

MC-103/N

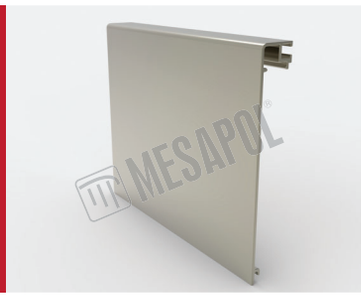

Açılı Cam Yatağı Kapağı Düz (4,60 kg / 6 mt)
Angled Glass Base Profile Cover (4,60 kg / 6 mt)
Enjoliveur Droit Profil De Sol (4,60 kg / 6 mt)
Perfil Lateral Para Bases (4,60 kg / 6 mt)

MC-106

10-12-16 mm Cam İçin Kapak Fitili (1 mt)
10-12-16 mm Glass Gasket For Profile Cover (1 mt)
10-12-16 mm Joint D'enjoliveur Pour Verre (1 mt)
10-12-16 mm Goma De Vidrio (1 mt)

MC-402/A

Cam Yatağı Drenaj Profili 300 cm - Büyük
Drainage Profile 300 cm - Big
Drainage Pour Profil De Sol 300 cm
Perfil De Drenaje 300 cm

MC-607/B

Açılı Cam Yatağı Tapası
Angled Glass Base Profile Plug
Embout De Finiton Pour Profil De Sol
Tapa Final

M27-48/B

M08 Tijli Çubuk 15 cm
M08 Rod 15 cm
M08 Tige Fileté 15 cm
M08 Barra 15 cm

M27-52/C

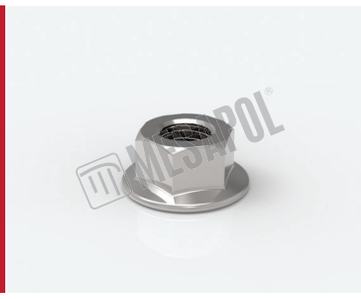

M08 Flanşlı Somun
M08 Nut And Washer
Ecrou Avec Rondelle M08
M08 Tuerca Con Arandela

GS-19

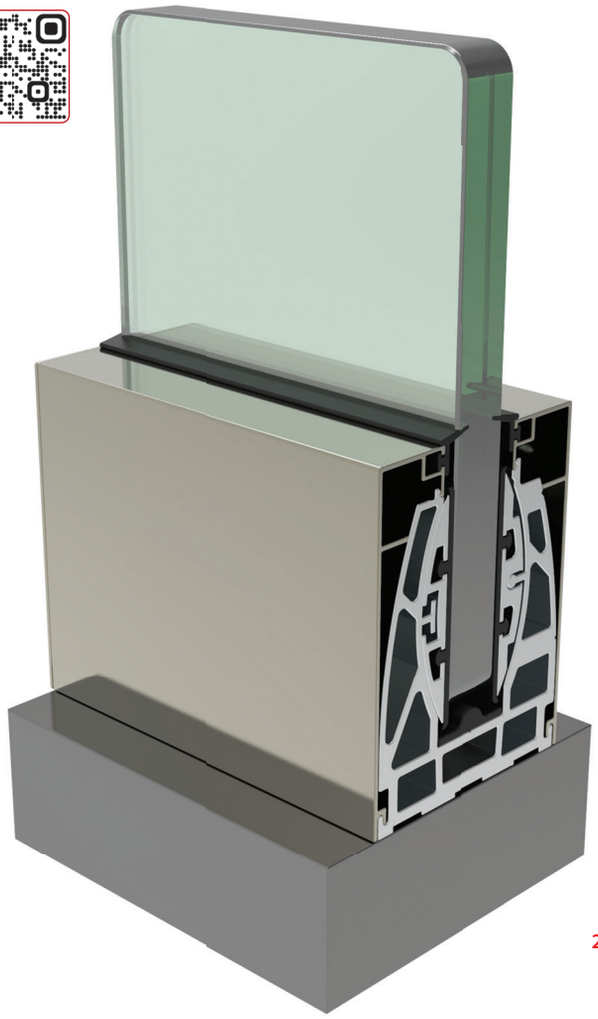

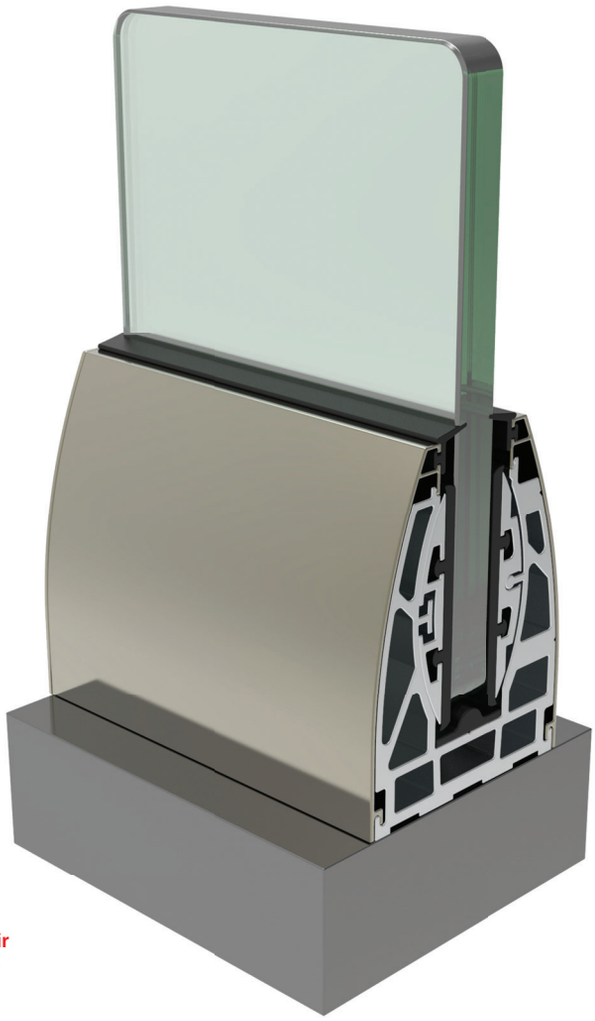

2° Ayarlanabilir
2° Adjustable
2° Ajustable

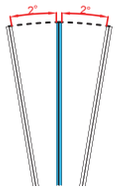

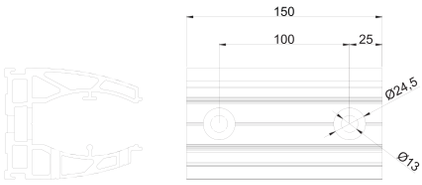

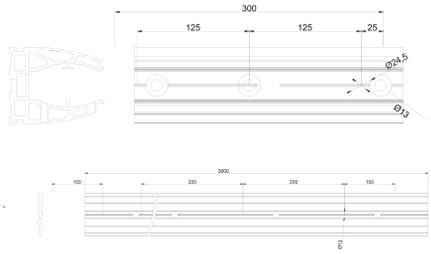

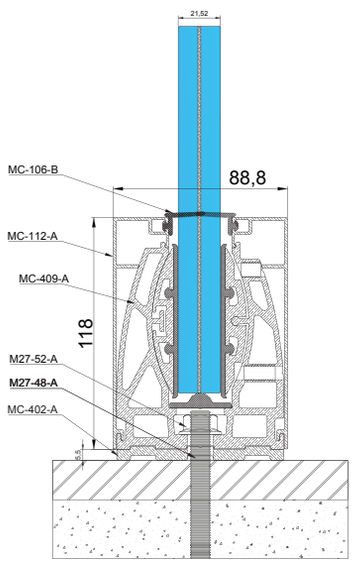

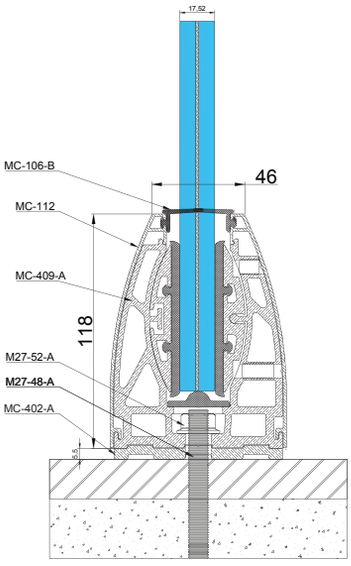

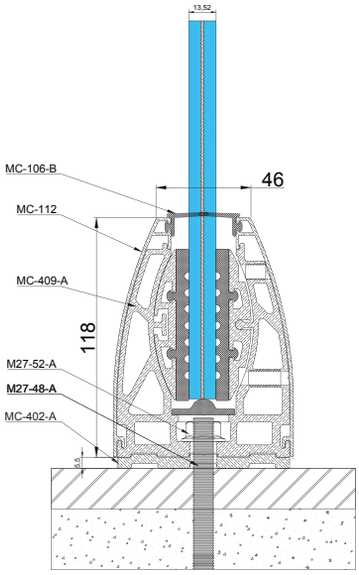

GS-19

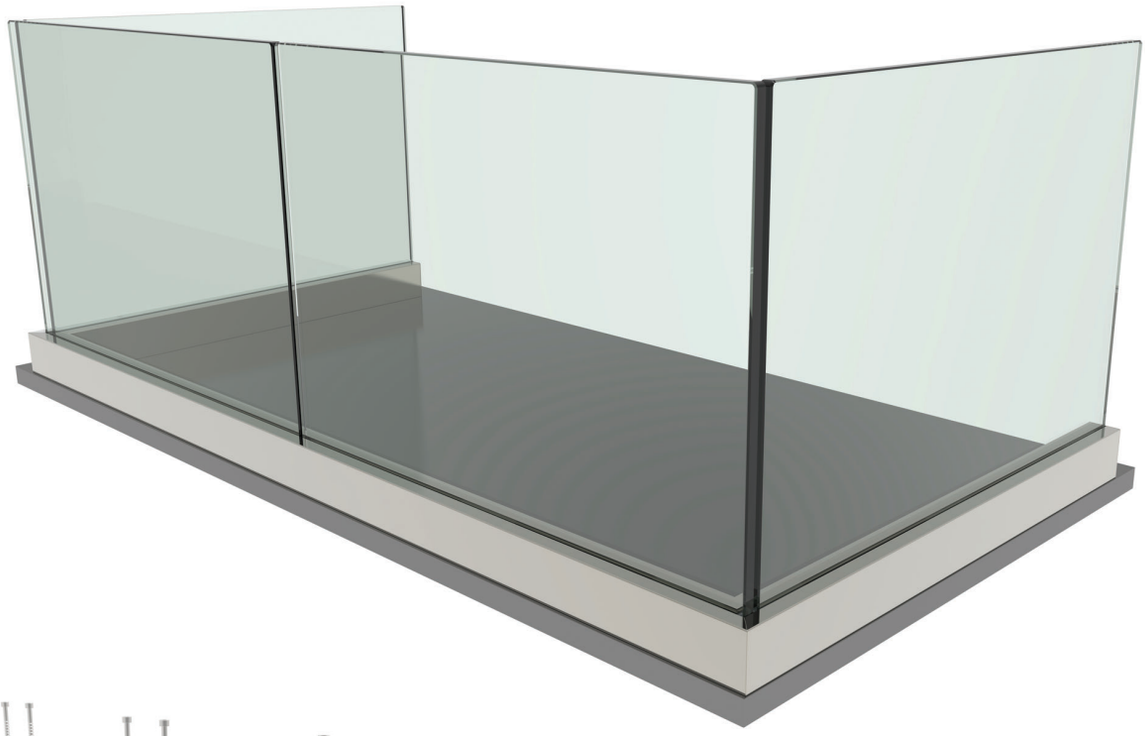

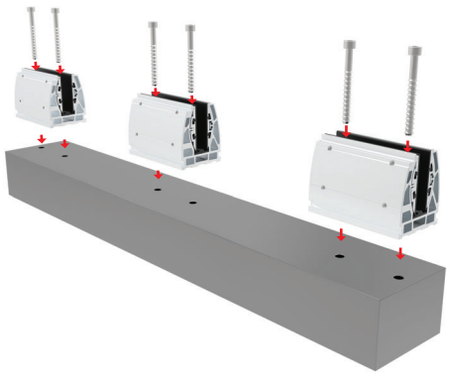

1

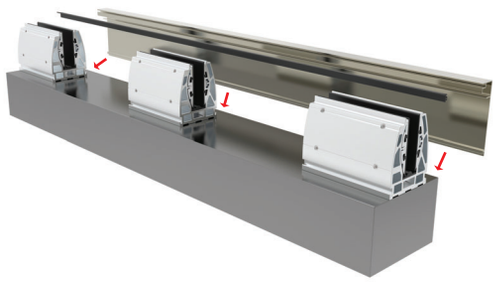

2

3

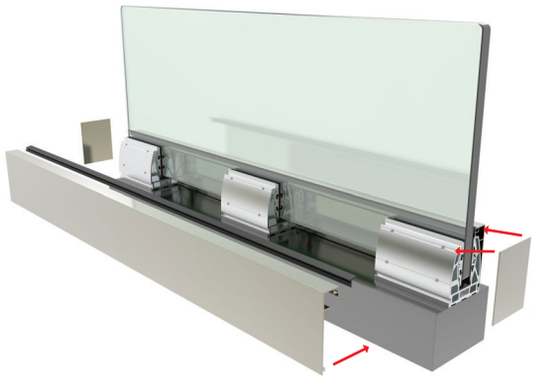

4

5

GS-19

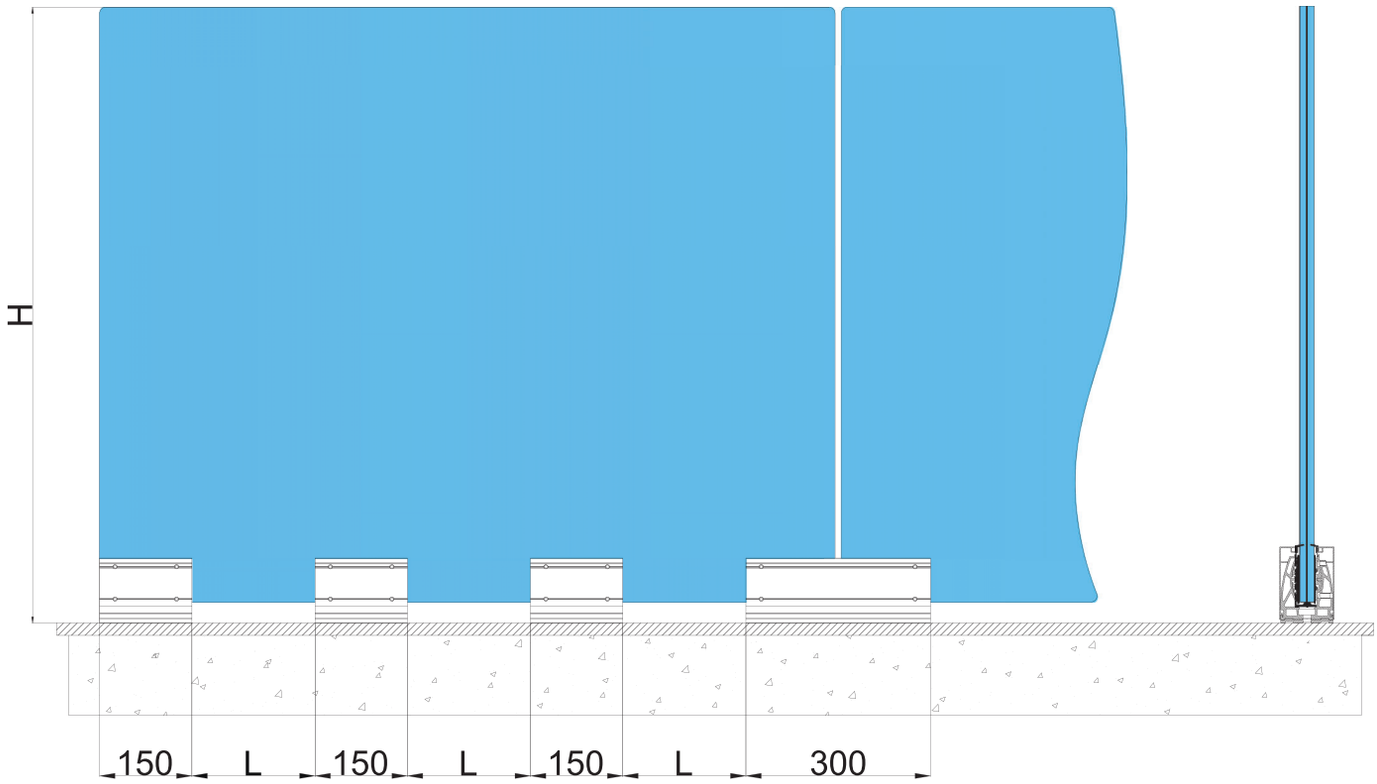

Cam Yüksekliği/H Glass Height/H Hauteur Verre/H Altura De Vidrio/H	Kalınlık (mm) Thickness (mm) Epaisseur (mm) Espesor (mm)	L	(kN)	(J)
0-599 mm	(6+1,52+6), (8+1,52+8) (10+1,52+10)	500 mm	-	-
600-899 mm	(6+1,52+6), (8+1,52+8) (10+1,52+10)	400 mm	-	-
900-1099 mm	(6+1,52+6), (8+1,52+8) (10+1,52+10)	300 mm	-	-
1100-1200 mm	(6+1,52+6), (8+1,52+8)	266 mm	4,5	600
	(10+1,52+10)		4,5	600

*Bina yüksekliğine göre kullanılacak cam kalınlığı ve ürün aralığı değişkenlik gösterebilir.
*Depending on the building's height the measurements and standards may change
*Les épaisseurs de verre et les entraxe peuvent varier selon la hauteur du batiment.
*Dependiendo de la altura del edificio, las medidas y las estandares pueden cambiar

MC-409/A

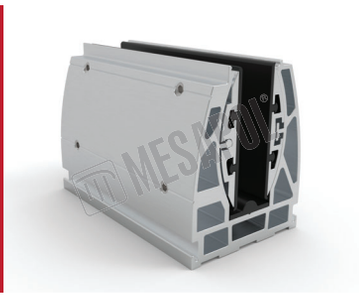

Ayarlı Cam Yatağı Takımı 15 cm (12-16-20 mm Cam)

Adjustable Glass Base Profile 15 cm (12-16-20 mm Glass)

Kit Profil de sol réglage de l'aplomb du verr
L = 15 cm (Verre 12 - 21,52 mm)

Base Perfil Ajustable 15 cm (Con Cuña Y Parte Plástica Para Apretar El Vidrio) (12-16-20 mm Vidrio)

MC-409/B

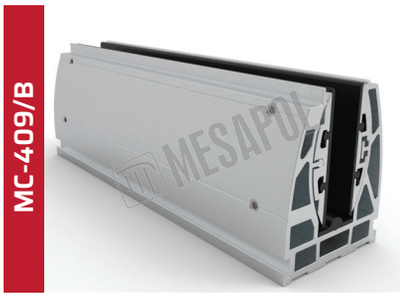

Ayarlı Cam Yatağı Takımı 30 cm (12-16-20 mm Cam)

Adjustable Glass Base Profile 30 cm (12-16-20 mm Glass)

Kit Profil de sol réglage de l'aplomb du verr
L = 30 cm (Verre 12 - 21,52 mm)

Base Perfil Ajustable 30 cm (Con Cuña Y Parte Plástica Para Apretar El Vidrio) (12-16-20 mm Vidrio)

MC-112

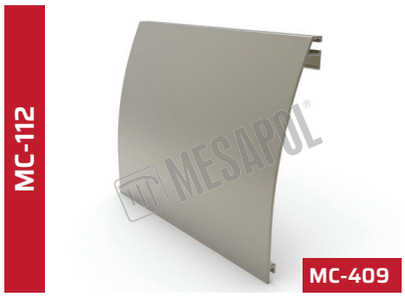

Ayarlı Cam Yatağı Kapağı Elips (3,90 kg / 6 mt)

Base Profile Cover (3,90 kg / 6 mt)

Enjoliveur Ovale (3,90 kg / 6 mt)

Perfil Lateral Para Bases (3,90 kg / 6 mt)

MC-112/A

Ayarlı Cam Yatağı Kapağı Düz (4,80 kg / 6 mt)

Base Profile Cover (4,80 kg / 6 mt)

Enjoliveur Rectangle (4,80 kg / 6 mt)

Perfil Lateral Para Bases (4,80 kg / 6 mt)

MC-106/B

12-16-20 mm Cam İçin Kapak Fitili (1 mt)

12-16-20 mm Glass Gasket For Profile Cover (1 mt)

12-16-20 mm Joint D'enjoliveur Pour Verre (1 mt)

12-16-20 mm Goma De Vidrio (1 mt)

MC-402/A

Cam Yatağı Drenaj Profili 300 cm - Büyük

Drainage Profile 300 cm - Big

Drainage Pour Profil De Sol 300 cm

Perfil De Drenaje 300 cm

MC-607/C

Ayarlı Cam Yatağı Tapası Elips

Adjustable Glass Base Ellipse Profile Plug

Embout De Finiton Pour Profil De Sol

Tapa Final

MC-607/D

Ayarlı Cam Yatağı Tapası Düz

Adjustable Glass Base Square Profile Plug

Embout De Finiton Pour Profil De Sol

Tapa Final

M27-48/A

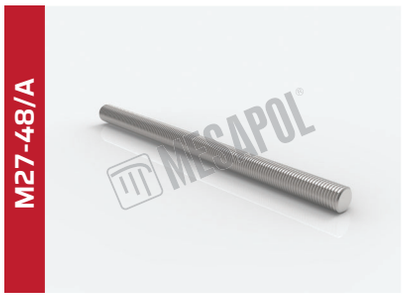

M10 Tijli Çubuk 15 cm

M10 Rod 15 cm

M10 Tige Fileté 15 cm

M10 Barra 15 cm

M27-52/A

M10 Flanşlı Somun

M10 Nut And Washer

Ecrou Avec Rondelle M10

M10 Tuerca Con Arandela

M27-57

M10*150 Beton Vidası - Multi Monti

M10*150 Concrete Screw - Multi Monti

Vis Béton M10×150

M10*150 Tornillo Para Hormigón - Multi Monti

GS-19/L

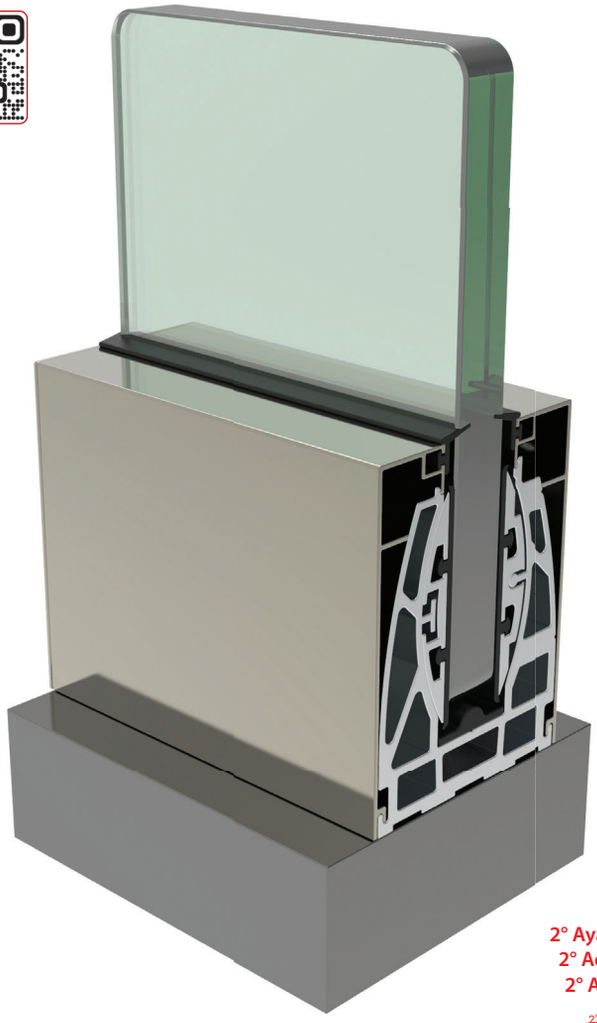

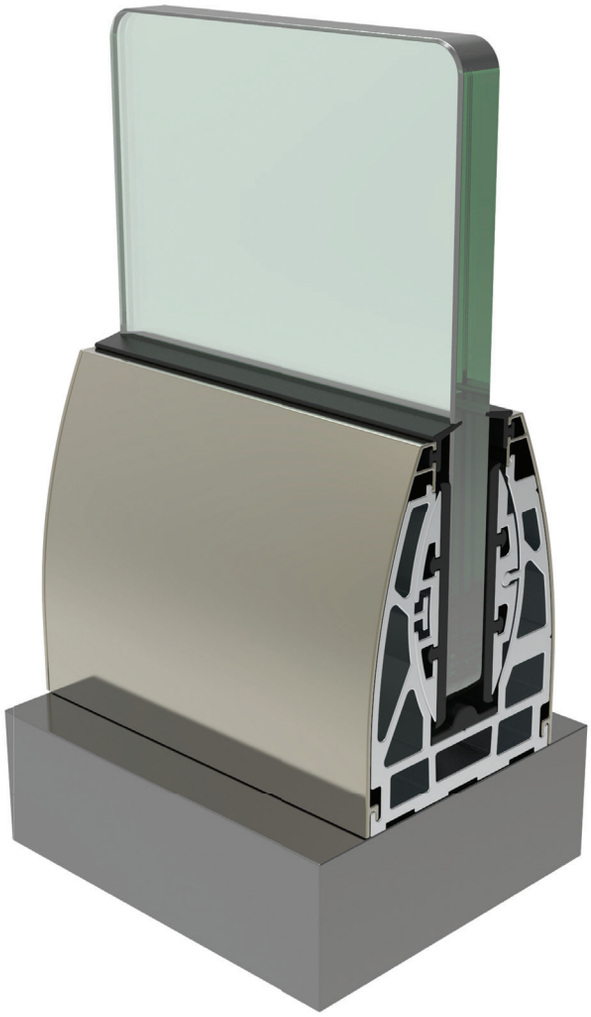

2° Ayarlanabilir
2° Adjustable
2° Ajustable

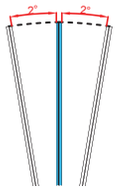

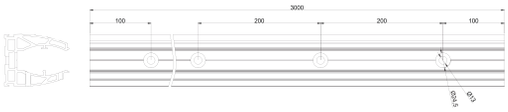

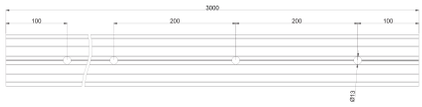

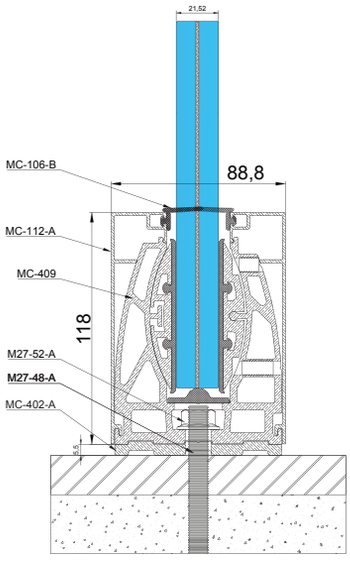

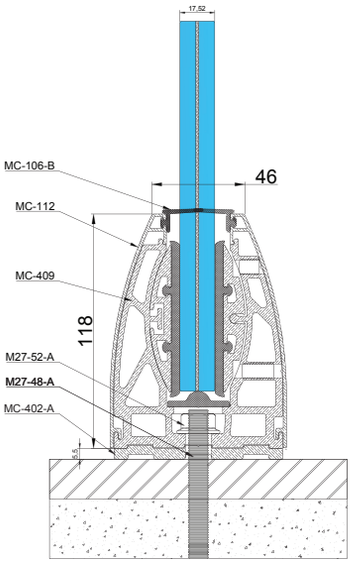

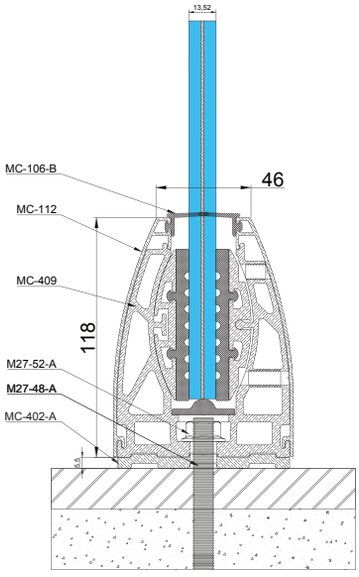

GS-19/L

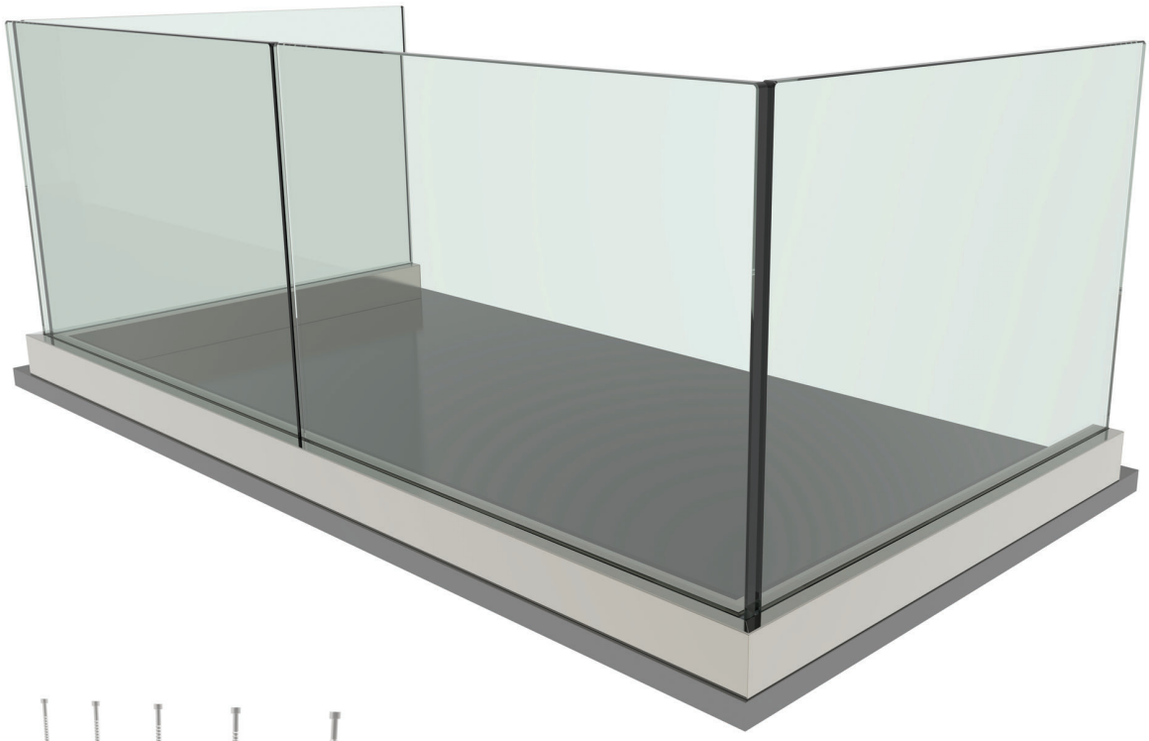

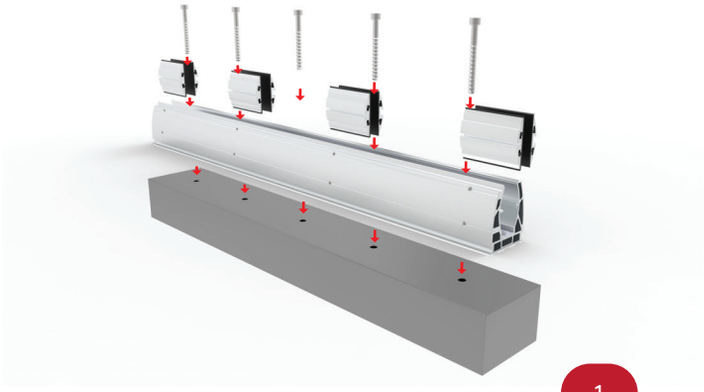

1

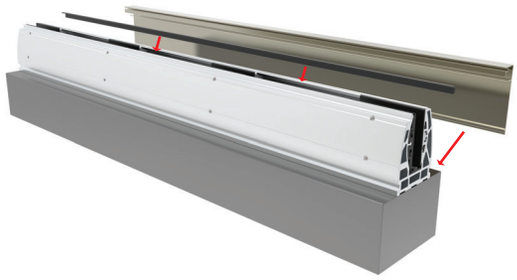

2

3

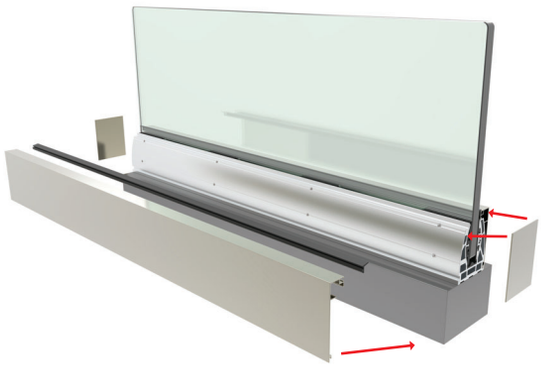

4

5

GS-19/L

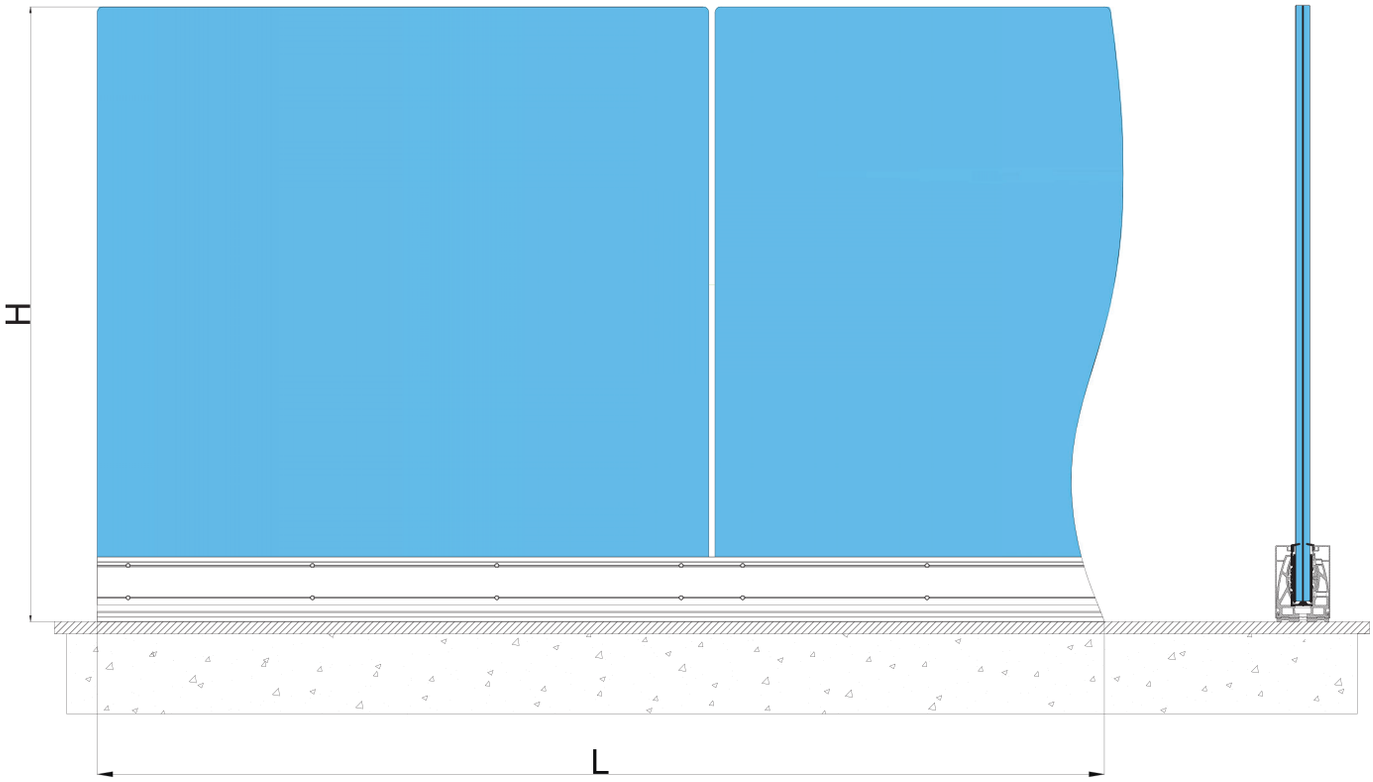

Cam Yüksekliği/H Glass Height/H Hauteur Verre/H Altura De Vidrio/H	Kalınlık (mm) Thickness (mm) Epaisseur (mm) Espesor (mm)	L	(kN)	(J)
0-1200 mm	(6+1,52+6), (8+1,52+8)	3000 mm	5,2	600
	(10+1,52+10)		6,1	600

MC-409

Ayarlı Cam Yatağı Takımı 300 cm (12-16-20 mm Cam)
Adjustable Glass Base Profile 300 cm (12-16-20 mm Glass)
Kit Profil de sol réglage de l'aplomb du verr L = 300 cm (Verre 12 - 21,52 mm)
Base Perfil Ajustable 300 cm (Con Cuña Y Parte Plástica Para Apretar El Vidrio) (12-16-20 mm Vidrio)

MC-112

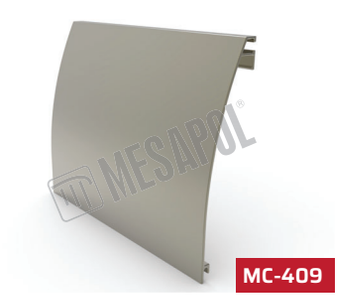

Ayarlı Cam Yatağı Kapağı Elips (3,90 kg / 6 mt)
Base Profile Cover (3,90 kg / 6 mt)
Enjoliveur Ovale (3,90 kg / 6 mt)
Perfil Lateral Para Bases (3,90 kg / 6 mt)

MC-112/A

Ayarlı Cam Yatağı Kapağı Düz (4,80 kg / 6 mt)
Base Profile Cover (4,80 kg / 6 mt)
Enjoliveur Rectangle (4,80 kg / 6 mt)
Perfil Lateral Para Bases (4,80 kg / 6 mt)

MC-106/B

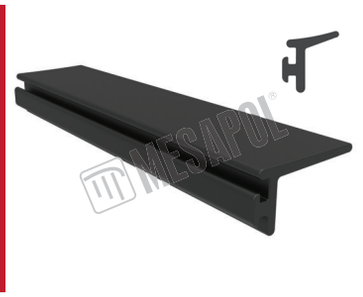

12-16-20 mm Cam İçin Kapak Fitili (1 mt)
12-16-20 mm Glass Gasket For Profile Cover (1 mt)
12-16-20 mm Joint D'enjoliveur Pour Verre (1 mt)
12-16-20 mm Goma De Vidrio (1 mt)

MC-402/A

Cam Yatağı Drenaj Profili 300 cm - Büyük
Drainage Profile 300 cm - Big
Drainage Pour Profil De Sol 300 cm
Perfil De Drenaje 300 cm

MC-607/C

Ayarlı Cam Yatağı Tapası Elips
Adjustable Glass Base Ellipse Profile Plug
Embout De Finiton Pour Profil De Sol
Tapa Final

MC-607/D

Ayarlı Cam Yatağı Tapası Düz
Adjustable Glass Base Square Profile Plug
Embout De Finiton Pour Profil De Sol
Tapa Final

M27-48/A

M10 Tijli Çubuk 15 cm
M10 Rod 15 cm
M10 Tige Fileté 15 cm
M10 Barra 15 cm

M27-52

M10 Pul
M10 Washer
Rondelle M10
M10 Arandela

M27-52/A

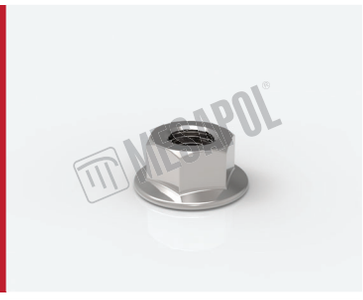

M10 Flanşlı Somun
M10 Nut And Washer
Ecrou Avec Rondelle M10
M10 Tuerca Con Arandela

M27-57

M10*150 Beton Vidası - Multi Monti
M10*150 Concrete Screw - Multi Monti
Vis Béton M10×150
M10*150 Tornillo Para Hormigón - Multi Monti

GS-20

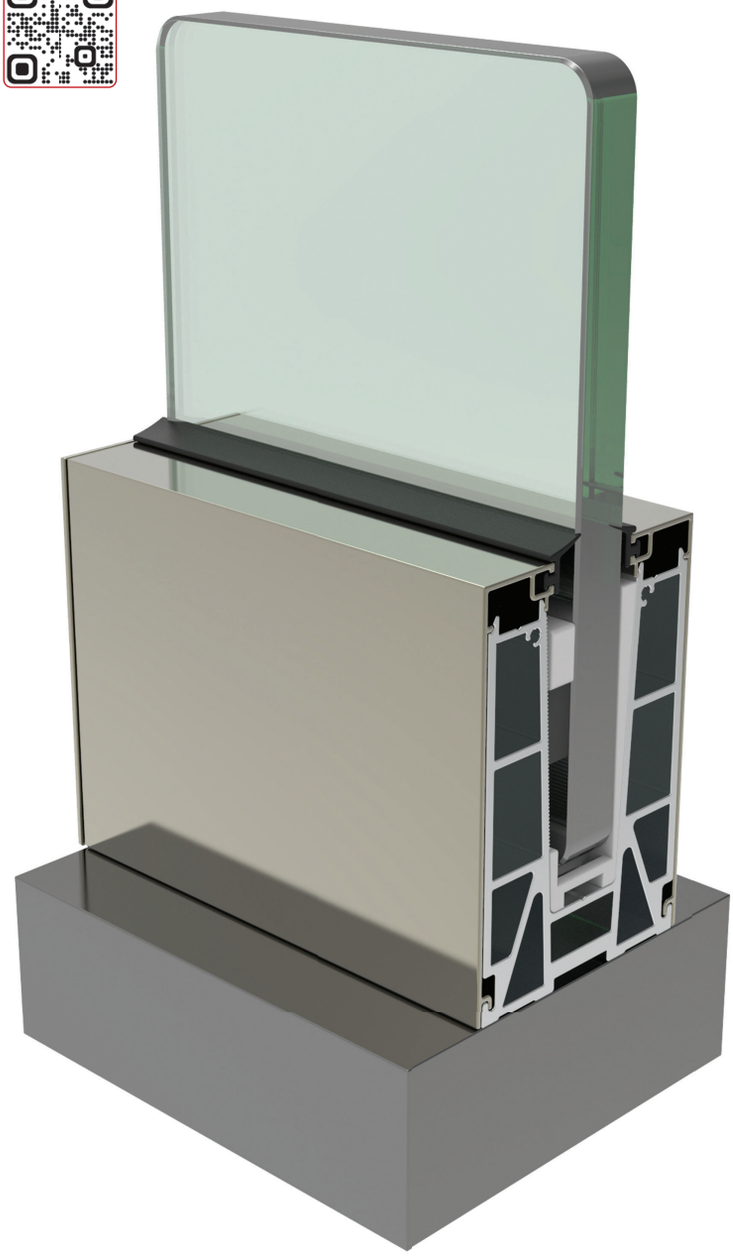

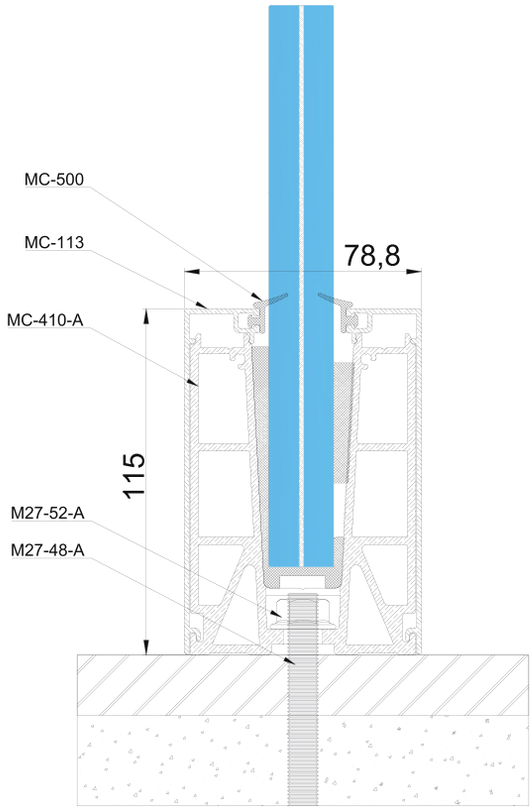
MC-500
MC-113
78,8
MC-410-A
115
M27-52-A
M27-48-A

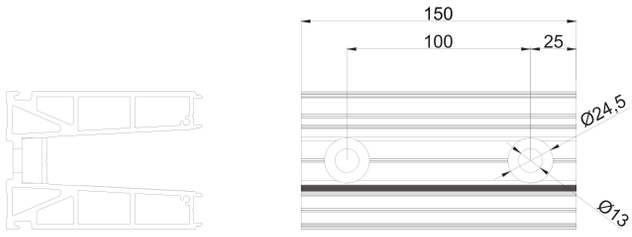
150
100
25
Ø24,5
Ø13

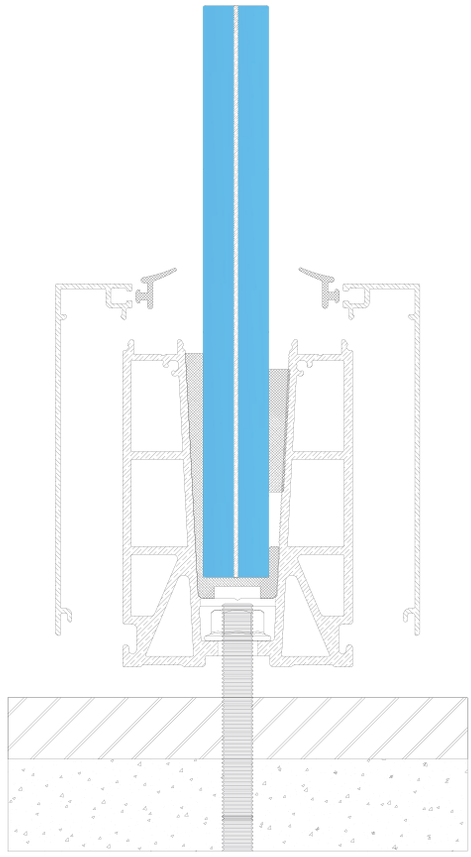

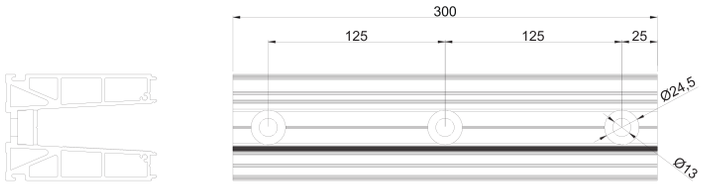
300
125
125
25
Ø24,5
Ø13

GS-20

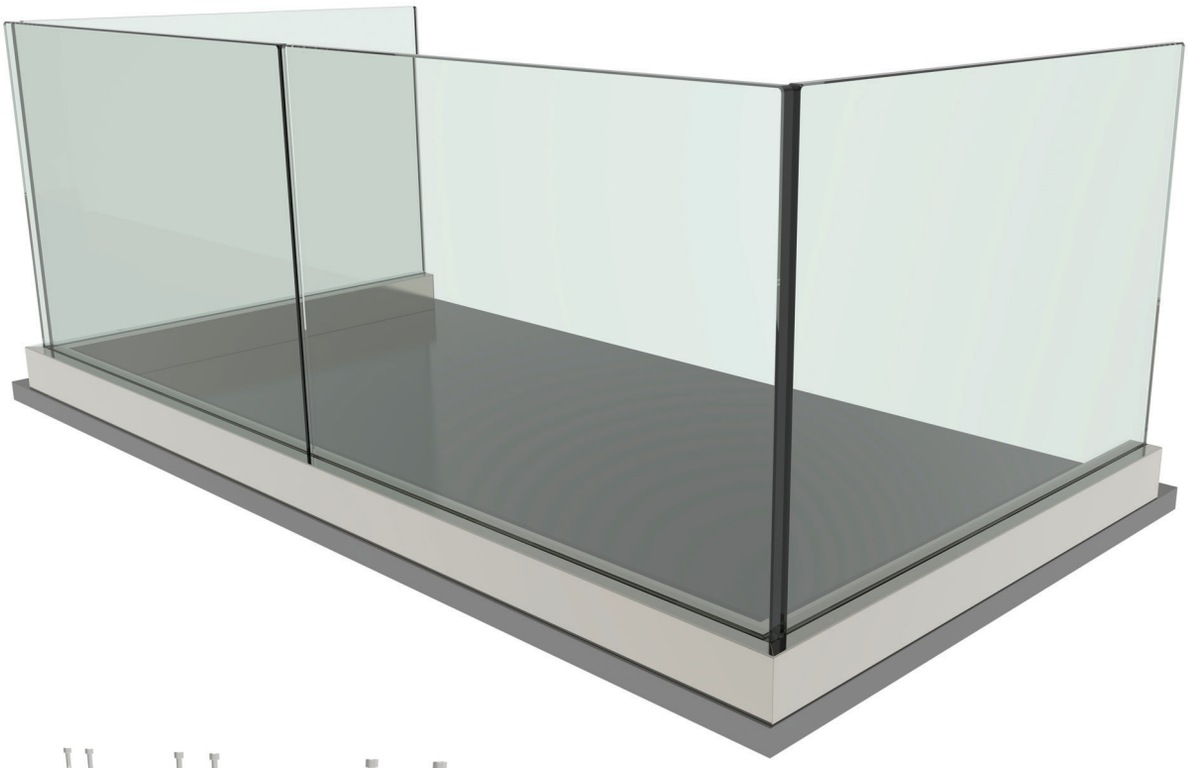

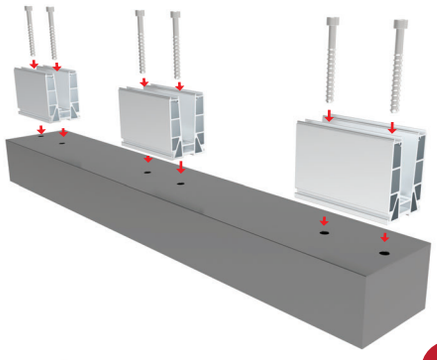

1

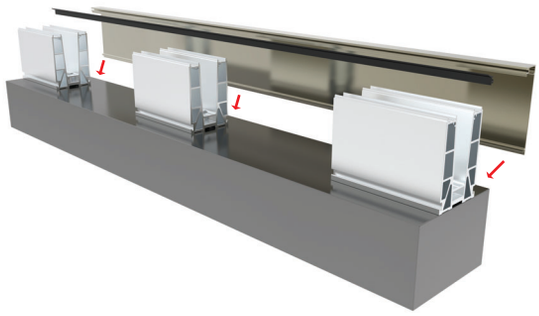

2

3

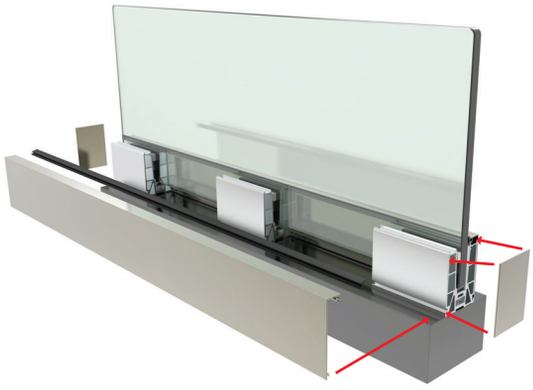

4

5

GS-20

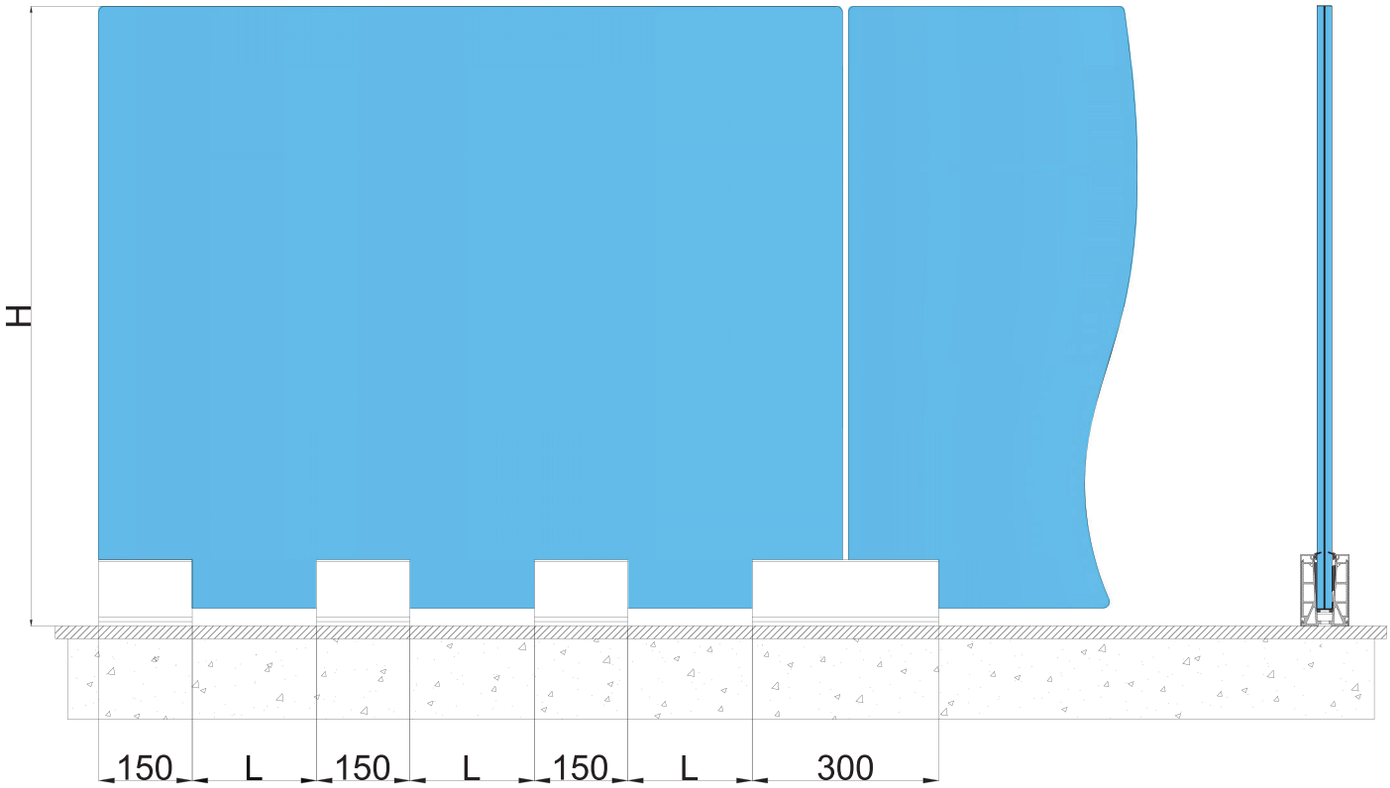

Cam Yüksekliği/H Glass Height/H Hauteur Verre/H Altura De Vidrio/H	Kalınlık (mm) Thickness (mm) Epaisseur (mm) Espesor (mm)	L	(kN)	(J)
0-599 mm	(8+1,52+8),(10+1,52+10)	500 mm	-	-
600-899 mm	(8+1,52+8),(10+1,52+10)	400 mm	-	-
900-1099 mm	(8+1,52+8),(10+1,52+10)	300 mm	-	-
1100-1200 mm	(8+1,52+8),(10+1,52+10)	266 mm	-	600

*Bina yüksekliğine göre kullanılacak cam kalınlığı ve ürün aralığı değişkenlik gösterebilir.
*Depending on the building's height the measurements and standards may change
*Les épaisseurs de verre et les entraxe peuvent varier selon la hauteur du batiment.
*Dependiendo de la altura del edificio, las medidas y las estandares pueden cambiar

MC-410/A

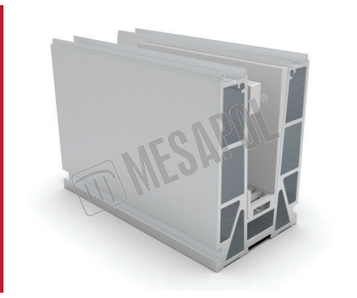

Cam Yatağı Takımı 15 cm (16 - 20 mm Cam)
Glass Base Profile 15 cm (16 - 20 mm Glass Thickness)
Profil De Sol L= 15 cm (Verre 16-20 mm)
Base Perfil 15 cm (Con Cuña Y Parte Plástica Para Apretar El Vidrio) (16 - 20 mm Vidrio)

MC-410/B

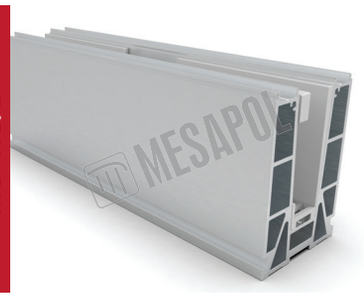

Cam Yatağı Takımı 30 cm (16 - 20 mm Cam)
Glass Base Profile 30 cm (16 - 20 mm Glass Thickness)
Profil De Sol L= 30 cm (Verre 16-20 mm)
Base Perfil 30 cm (Con Cuña Y Parte Plástica Para Apretar El Vidrio) (16 - 20 mm Vidrio)

MC-113

Cam Yatağı Kapağı Düz (4,30 kg / 6 mt)
Base Profile Cover (4,30 kg / 6 mt)
Enjoliveur Droit Profil De Sol (4,30 kg / 6 mt)
Perfil Lateral Para Bases (4,30 kg / 6 mt)

MC-500

8 - 10 - 12 - 16 - 20 mm Cam Fitili (1mt)
8 - 10 - 12 - 16 - 20 mm Glass Gasket (1mt)
8-10-12-16-20 mm Joint D'enjoliveur Pour Verre (1 mt)
8 - 10 - 12 - 16 - 20 mm Goma (1 mt)

MC-611

Cam Yatağı Tapası
Base Profile Plug
Embout De Finiton Pour Profil De Sol
Tapa Final

M27-48/A

M10 Tijli Çubuk 15 cm
M10 Rod 15 cm
M10 Tige Fileté 15 cm
M10 Barra 15 cm

M27-52

M10 Pul
M10 Washer
Rondelle M10
M10 Arandela

M27-52/A

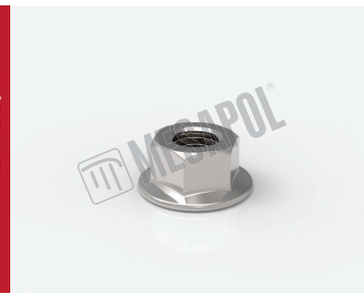

M10 Flanşlı Somun
M10 Nut And Washer
Ecrou Avec Rondelle M10
M10 Tuerca Con Arandela

M27-57

M10*150 Beton Vidası - Multi Monti
M10*150 Concrete Screw - Multi Monti
Vis Béton M10×150
M10*150 Tornillo Para Hormigón - Multi Monti

GS-20/L

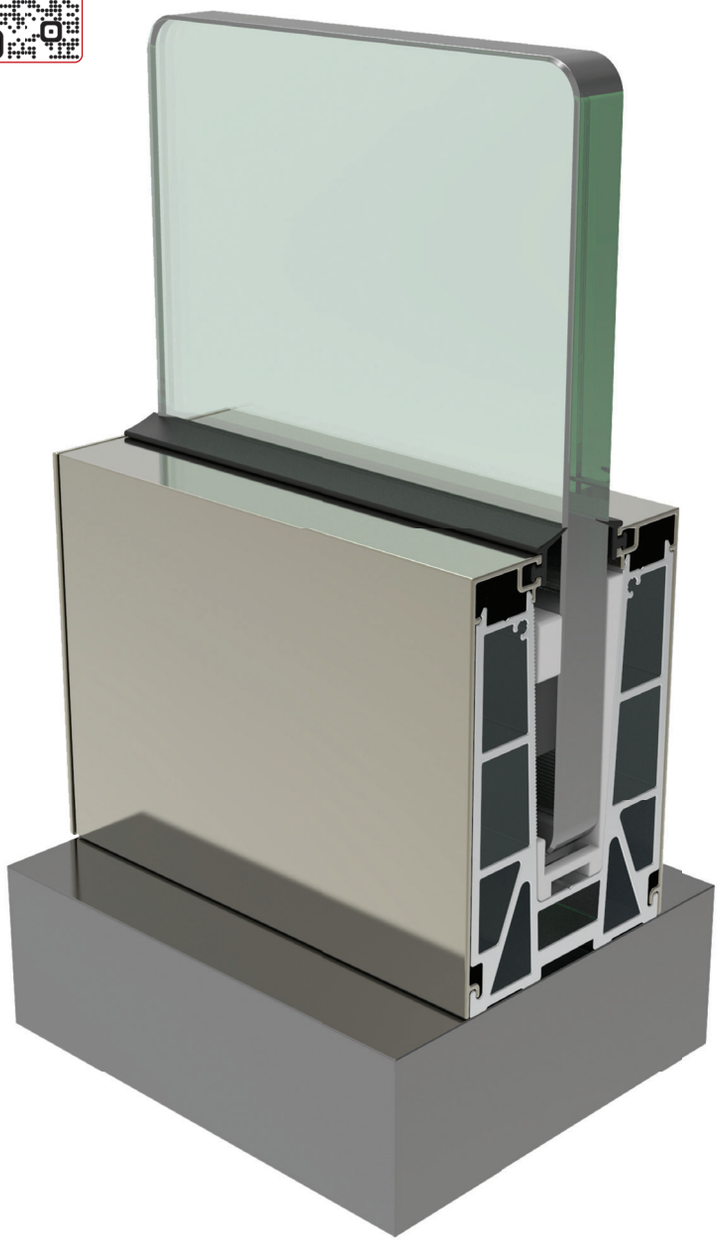

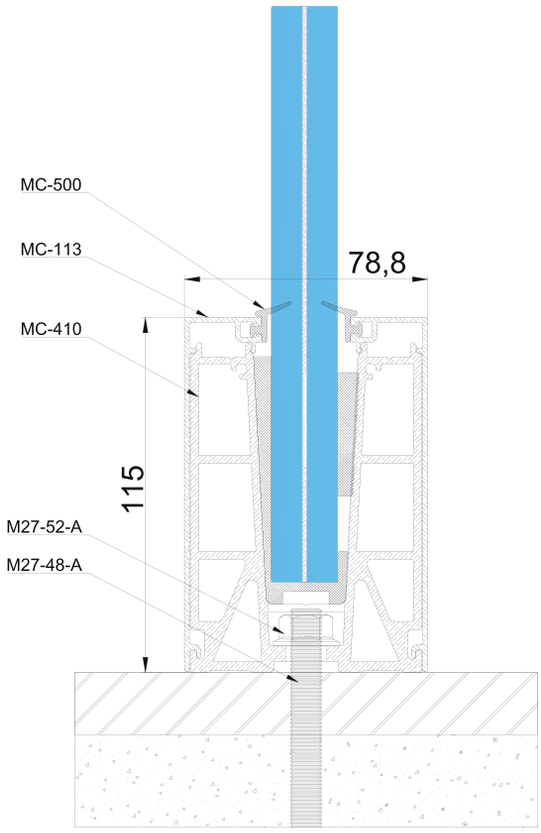
MC-500
MC-113
MC-410
M27-52-A
M27-48-A
78,8
115

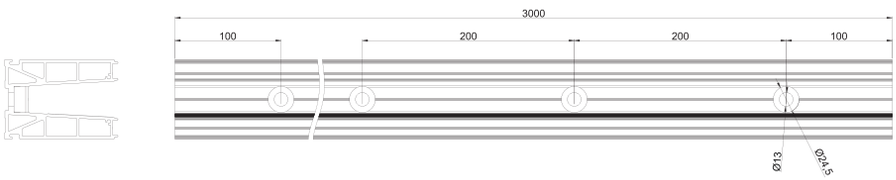
3000
100
200
200
100
Ø13
Ø24,5

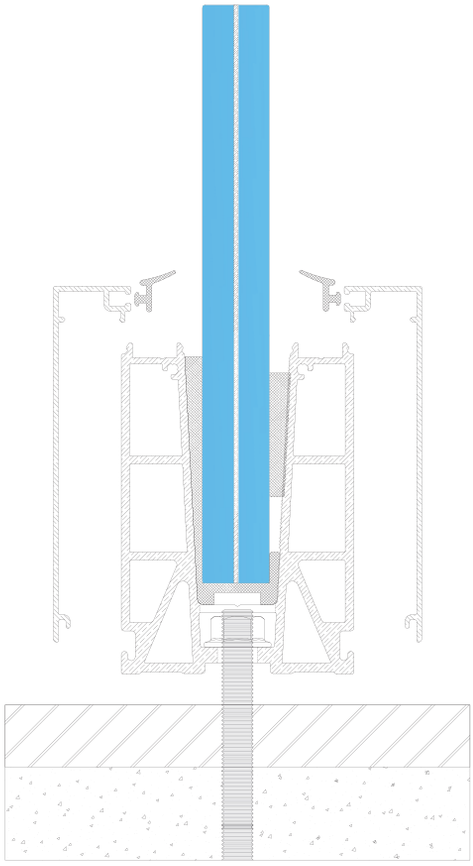

GS-20/L

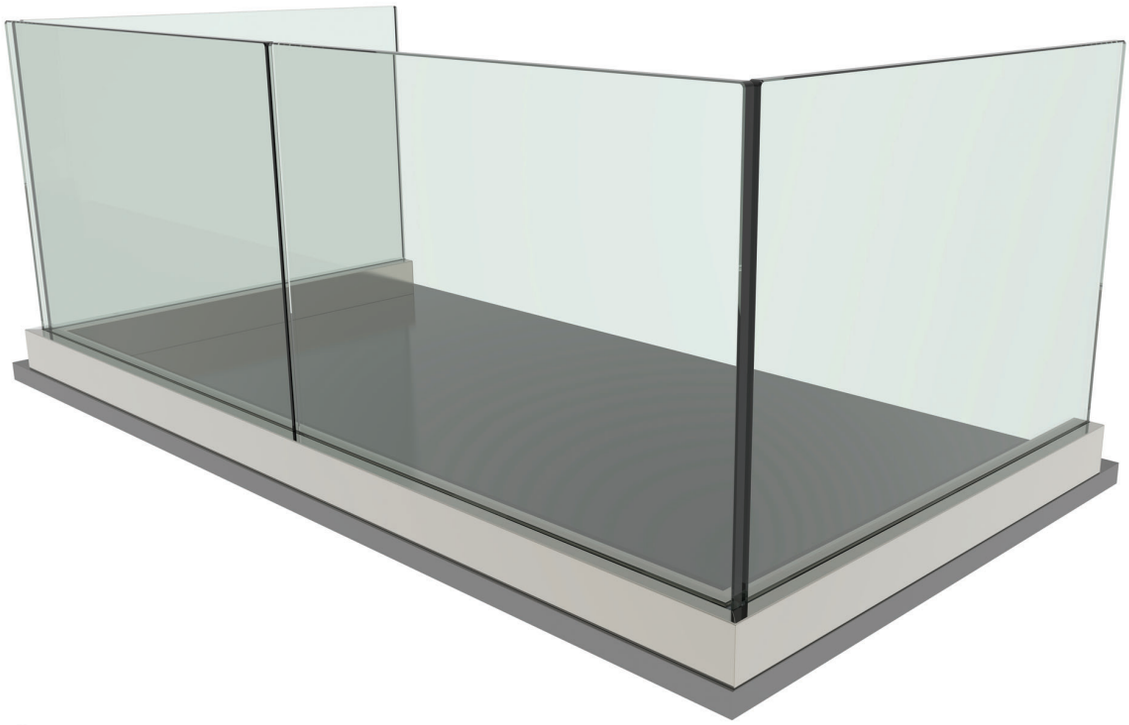

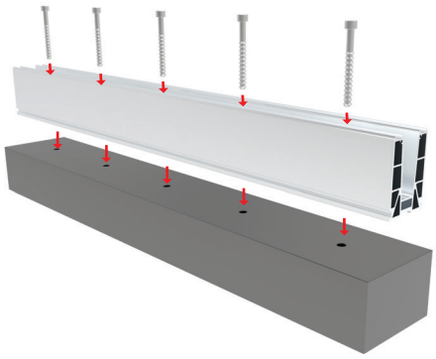

1

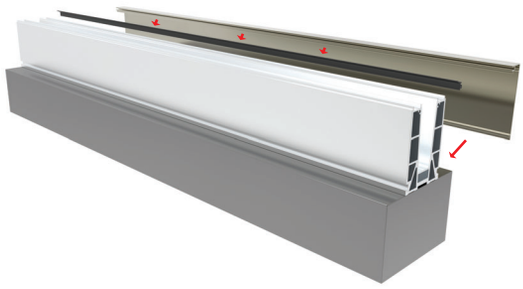

2

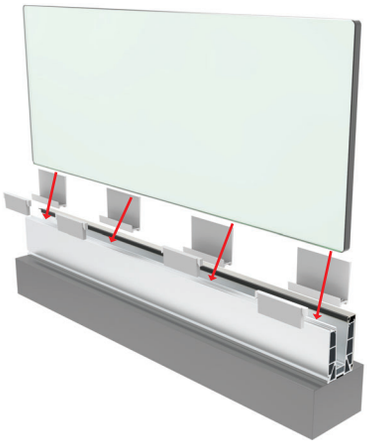

3

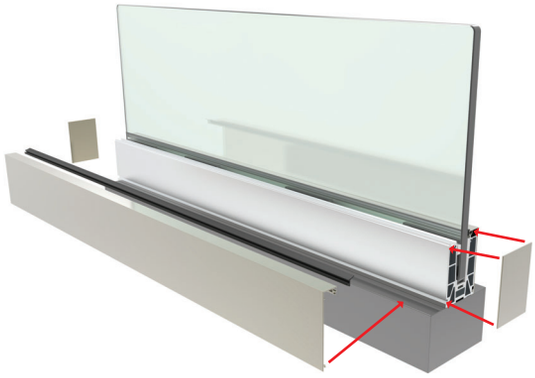

4

5

GS-20/L

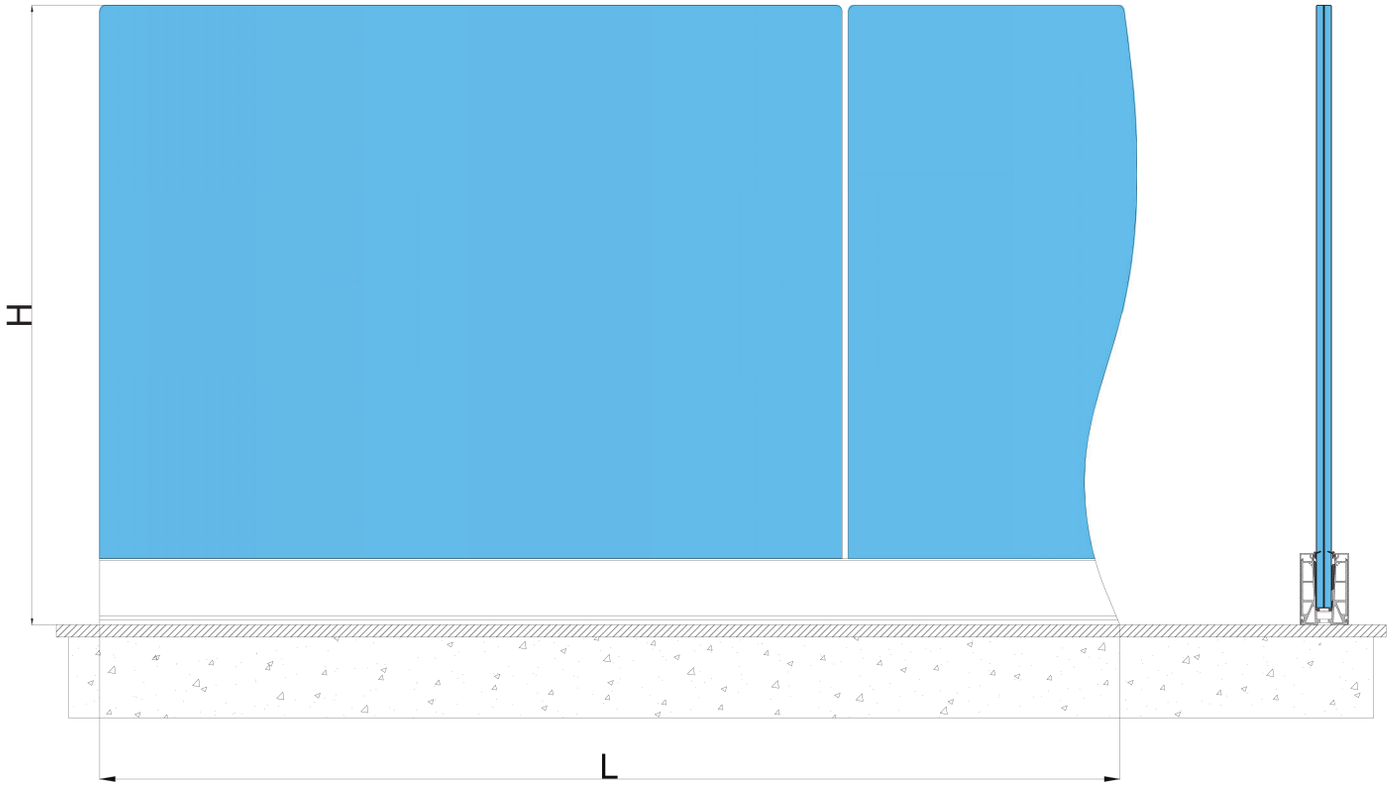

Cam Yüksekliği/H Glass Height/H Hauteur Verre/H Altura De Vidrio/H	Kalınlık (mm) Thickness (mm) Epaisseur (mm) Espesor (mm)	L	(kN)	(J)
0-1200 mm	(8+1,52+8)	3000 mm	4,0	600
	(10+1,52+10)		4,1	600

MC-410

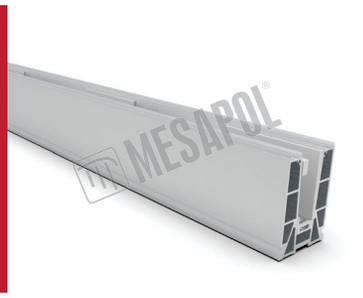

Cam Yatağı Takımı 300 cm (16 - 20 mm Cam)
Glass Base Profile 300 cm (16 - 20 mm Glass Thickness)
Profil De Sol L= 300 cm (Verre 16-20 mm)
Base Perfil 300 cm (Con Cuña Y Parte Plástica Para Apretar El Vidrio) (16 - 20 mm Vidrio)

MC-500

8 - 10 - 12 - 16 - 20 mm Cam Fitili (1mt)
8 - 10 - 12 - 16 - 20 mm Glass Gasket (1mt)
8-10-12-16-20 mm Joint D'enjoliveur Pour Verre (1 mt)
8 - 10 - 12 - 16 - 20 mm Goma (1 mt)

MC-113

Cam Yatağı Kapağı Düz (4,30 kg / 6 mt)
Base Profile Cover (4,30 kg / 6 mt)
Enjoliveur Droit Profil De Sol (4,30 kg / 6 mt)
Perfil Lateral Para Bases (4,30 kg / 6 mt)

MC-611

Cam Yatağı Tapası
Base Profile Plug
Embout De Finiton Pour Profil De Sol
Tapa Final

M27-48/A

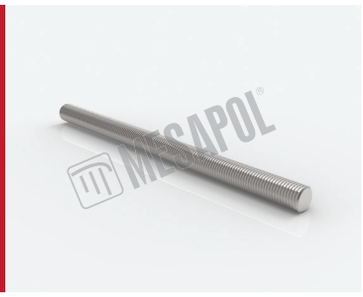

M10 Tijli Çubuk 15 cm
M10 Rod 15 cm
M10 Tige Fileté 15 cm
M10 Barra 15 cm

M27-52

M10 Pul
M10 Washer
Rondelle M10
M10 Arandela

M27-52/A

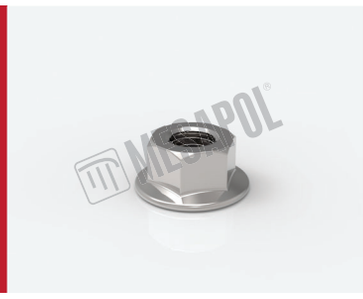

M10 Flanşlı Somun
M10 Nut And Washer
Ecrou Avec Rondelle M10
M10 Tuerca Con Arandela

M27-57

M10*150 Beton Vidası - Multi Monti
M10*150 Concrete Screw - Multi Monti
Vis Béton M10×150
M10*150 Tornillo Para Hormigón - Multi Monti

Profiller / Profiles

Küpeşte/Balustrade

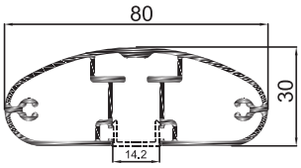

ME-01 (7,5 Kg / 6 mt)
80 x 30 Elips Cam Kanallı Üst Profil
80 x 30 Ellipse Glass Channeled Upper Profile
Main Courante Ovale 80x30 mm Avec rainure Verre Central
80 x 30 Perfil Pasamano Elipse

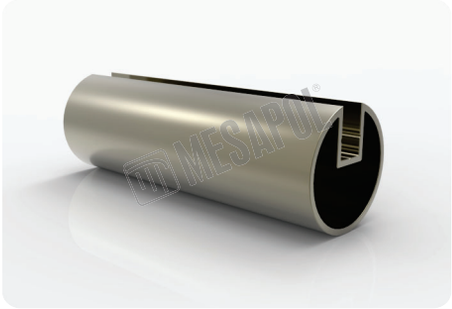

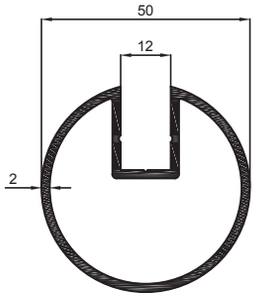

M1-11 (6,2 Kg / 6 mt)
50 mm Cam Kanallı Boru 2 mm (Kanal Genişliği 12 mm)
50 x 2 mm Glazing Pipe With Channel 12 mm
Tube rond 50 x 2 mm à fond de gorge 12 mm
50 x 2 mm Perfil Barra con Canal 12 mm

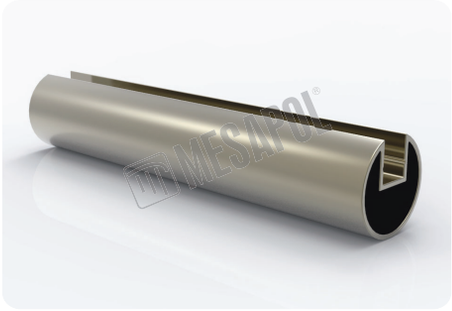

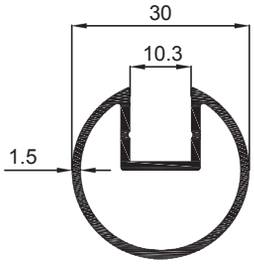

M1-11/A (3 Kg / 6 mt)
30 mm Cam Kanallı Boru
30 x 1.5 mm Pipe With Channel 10,3 mm
Tube rond 30×1,5 mm à fond de gorge
30 x 1.5 mm Perfil Barra Con Canal 10,3 mm

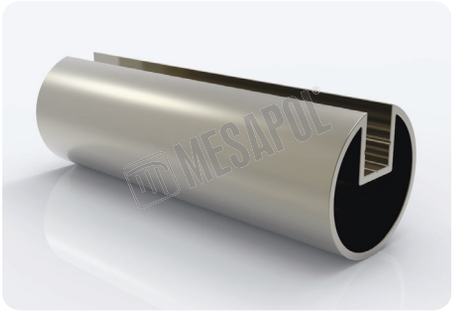

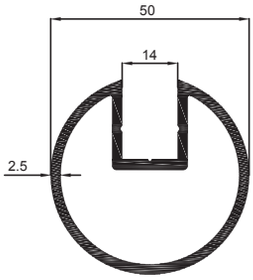

M1-11/C (7.7 Kg / 6 mt)
50 mm Cam Kanallı Boru 2,5 mm (Kanalı Genişliği 14 mm)
50 x 2.5 mm Glazing Pipe With Channel 14 mm
Tube rond 50×2,5 mm à fond de gorge 14 mm
50 x 2.5 mm Perfil Barra Con Canal 14 mm

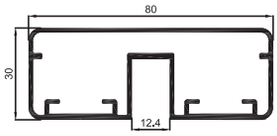

MK-01 (7.7 Kg / 6 mt)
80 x 30 Dikdörtgen Cam Kanallı Üst Profil
80 x 30 Rectangular Glass Channelled Upper Profile (12,4 mm)
Main courante rectangulaire 80×30 mm à fond de gorge
80 x 30 Perfil Rectángulo Pasamano Con Canal (12,4 mm)

Profilés / Perfiles

Profiller / Profiles

Küpeşte/Balustrade

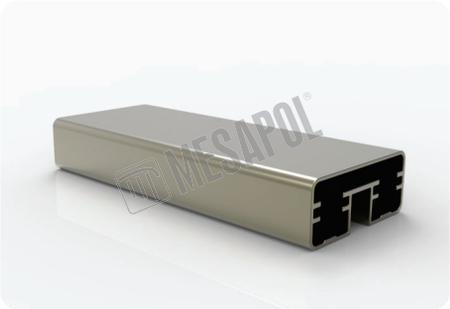

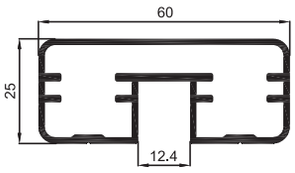

MK-02 (6 Kg / 6 mt)
60 x 25 Dikdörtgen Cam Kanallı Üst Profil
60 x 25 Rectangular Glass Channelled Upper Profile (12,4 mm)
Main courante rectangulaire 65 × 25 mm à fond de gorge
60 x 25 Perfil Rectángulo Pasamano Con Canal (12,4 mm)

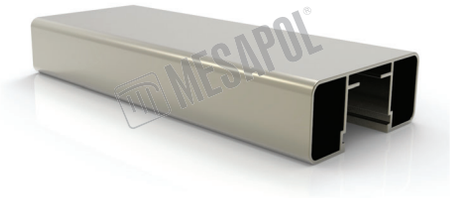

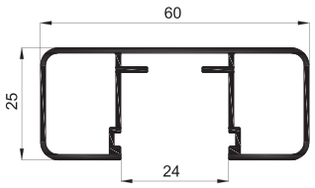

MK-02/A (4 Kg / 6 mt)
60 x 25 Dikdörtgen Cam Kanallı Üst Profil (12-16-20 mm)
60 x 25 Rectangular Glass Channelled Upper Profile (12-16-20 mm)
Main courante rectangulaire 65×25 mm
à fond de gorge (verre 12-16-20 mm)
60 x 25 Perfil Rectángulo Pasamano Con Canal (12-16-20 mm Vidrio)

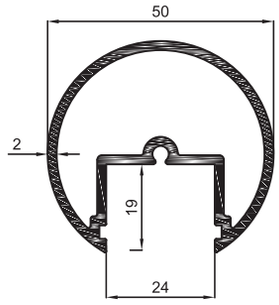

MC-103 (6,8 Kg / 6 mt)
16 mm ve 20 mm Cam İçin 50'lik Kanallı Boru
50 mm Channelled Profile For 16 mm And 20 mm Glass
Main courante ronde à fond de gorge
50 mm Perfil Pasamano (Con Gomas interior Para 16-20 mm Vidrio)

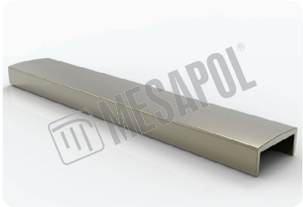

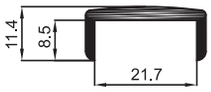

MC-103/A (1,7 Kg / 6 mt)
20 mm Cam Çıta Profili
20 mm Cap Rail Profile
Habillage verre U pour verre 20 mm
Perfil Pasamano Para Vidrio 20 mm

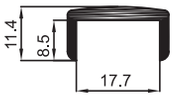

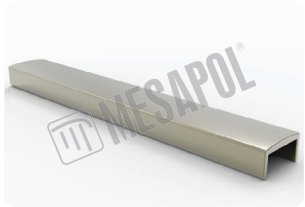

MC-103/B (1,5 Kg / 6 mt)
16 mm Cam Çıta Profili
16 mm Cap Rail Profile
Habillage verre U pour verre 16 mm
Perfil Pasamano Para Vidrio 16 mm

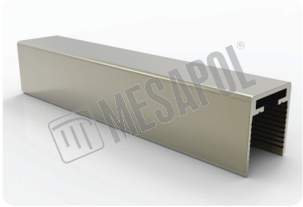

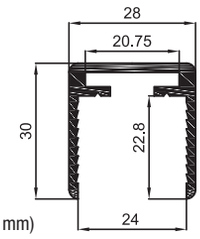

MC-103/C (3,3 Kg / 6 mt)
30 x 28 Cam Üst Profili
30 x 28 Cap Rail Profile (For Glass 12-16-20 mm)
Habillage verre U 28×30 mm
30 x 28 Perfil Pasamano (Con Gomas interior Para Vidrio 12-16-20 mm)

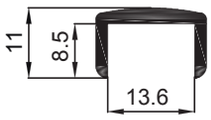

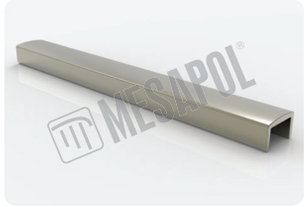

MC-103/D (1,2 Kg / 6 mt)
12 mm Cam Çıta Profili
12 mm Cap Rail Profile
Habillage verre U pour verre 12 mm
Perfil Pasamano Para Vidrio 12 mm

Profilés / Perfiles

ME-101

80x30 Elips Dıştan Flanşı

80x30 Ellipse External Flange

Départ Murale Pour Main Courante Ovale 80×30 Mm

80x30 Final Soporte Fijación Pasamano / Pared

MK-102

60x25 Duvar Flanşı

60x25 Wall Flange

Départ Murale Pour Main Courante 60×25 Mm

60x25 Final Soporte Fijación Pasamano / Pared

MK-103

80x30 Duvar Flanşı

80x30 Wall Flange

Départ Murale Pour Main Courante 80×30 Mm

80x30 Final Soporte Fijación Pasamano / Pared

MK-304/B

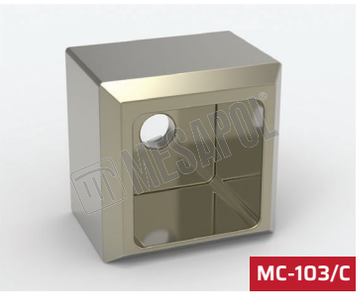

30x28 Duvar Flanşı

30x28 Wall Flange

Départ Murale Pour Main Courante 30×28 mm

30x28 Final Soporte Fijación Pasamano / Pared

MC-200/F

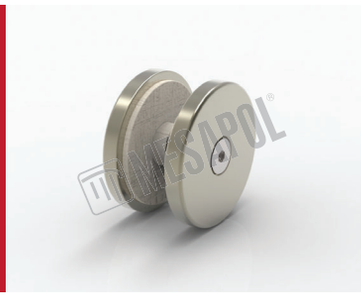

Cam Arası Aparatı

Fixing Point Between Glass 40 mm

Support Alignement Verre

Pinza Fijación Entre Vidrio 40 mm

MC-207

16'lık Spiderlı Ara Bağlantı

16 Mm Interconnection With Spider

Liaison De Tube 16 mm Fixation Sur Verre

16 mm Interconexión Con Boton

MC-208

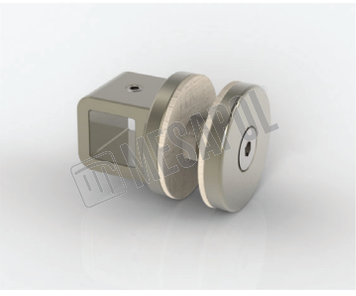

14'lık Spiderlı Ara Bağlantı

14 mm Interconnection With Spider

Liaison De Tube Carré 14×14 mm Fixation Sur Verre

14 mm Interconexión Con Boton

MC-212

Cam Lama Tutucu (12-16 mm Cam)

Big Glass Holder (12 - 16 mm Glass Thickness)

Pince À Verre De Sol Rectangulaire (Verre 12-16 mm)

Pinza Para Vidrio (Con Perforación) (12 - 16 mm Vidrio)

MC-212/A

Cam Lama Tutucu (10 mm Cam)

Small Glass Holder (10 mm Glass Thickness)

Pince À Verre De Sol Rectangulaire (Verre 10 mm)

Pinza Para Vidrio (Con Perforación) (10 mm Vidrio)

MC-608

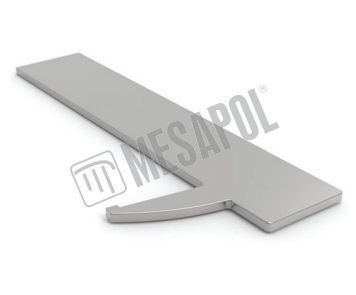

Cam Takma Çıkarma Aparatı

Glass Attachable And Detachable Equipment

Outillage Pour Démonter Verre

Equipo Acoplables Y Desmontables De Vidrio

MC-110

U Profil Tapası 30x28

U Profile Plug 30x28

Embout De Finiton

Tapa Final 30 X 28

M18-03/A

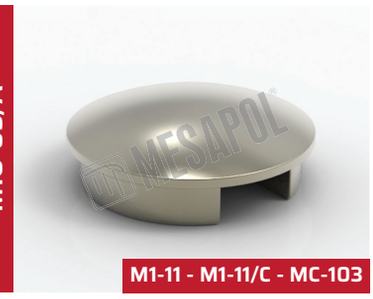

50'lik Kanalı Boru Tapası

50 mm Channelled Pipe Plug

Embout De Finition Pour Tube 50 mm Avec Rainure

50 mm Tapon Pasamano Con Canal

M18-10/C

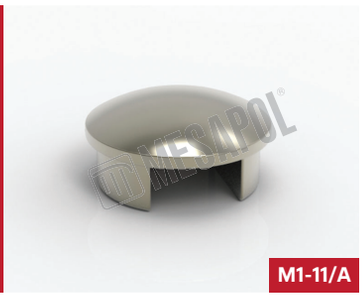

30'luk Kanallı Boru Tapası

30 mm Pipe Plug With Glass Channel

Embout Pour Poteau 30 mm De Avec Rainure

30 mm Tapon Barra Con Canal

M18-16/A

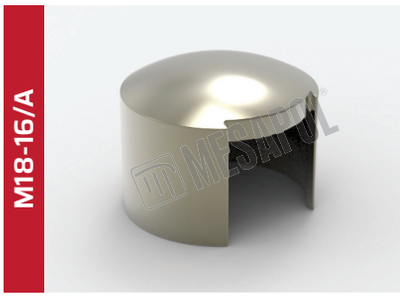

30'luk Şapkalı Boru Tapası

30 mm Sphere Plug Channeled

30 mm Embout Mural

30 mm Tapon Barra

ME-303

80 x 30 Elips Tapa Yatay Delik

80 x 30 Ellipse Plug With Horizontal Holes

Embout De Main Courante Ovale 80×30 Mm

80 x 30 Tapa Final

ME-305

80 x 30 Elips Tapa Dolu

80 x 30 Ellipse Plug

Embout De Main Courante Ovale 80×30 mm (Colle)

80 X 30 Tapa Final

MK-306

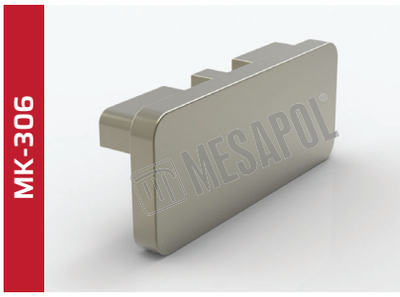

60 x 25 Profil Tapası

60 x 25 Profile Plug

Embout De Main Courante 60×25 mm

60 x 25 Tapa Final / Pasamano

MK-306/A

60 x 25 Geniş Kanallı Profil Tapası

60 x 25 Profile Plug

Embout De Main Courante 60×25 mm

60 x 25 Tapa Final / Pasamano

MK-307

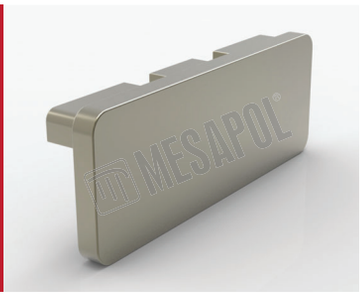

80 x 30 Profil Tapası

80 x 30 Profile Plug

Embout De Main Courante 80×30 Mm

80 x 30 Tapa Final / Pasamano

MC-111

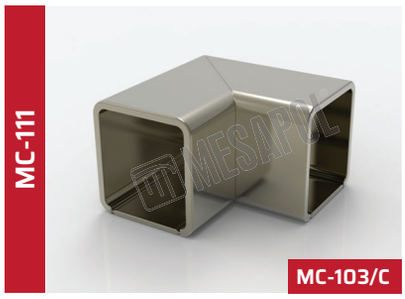

30 x 28 90 Derece Dirsek

30 x 28 90˚ Bend

Coude 90°

30 x 28 90˚ Codo Curva

M29-26

50'lik 90 Derece Cam Kanallı Dirsek

50 mm Channelled Bend 90º

Coude Soudé 90° Pour Main Courante Rond 50 mm

50 mm Codo Curva Con Canal 90º

M29-27/A

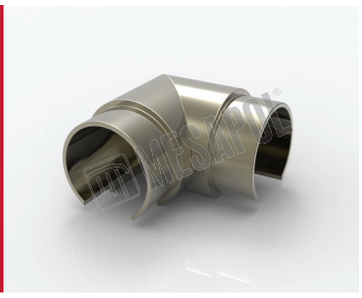

50'lik İçe Geçmeli Dirsek Kanallı

50 mm Bend 90º For Inside Fixing With Glass Channel

Coude Soudé 90° Pour Main Courante Rond 50 mm Jonction Intérieur Avec Rainure Verre

50 mm Codo Curva Con Canal 90º

ME-404

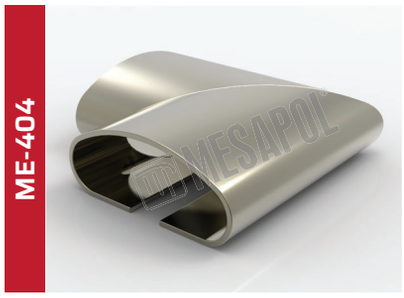

80 x 30 Elips 90 Derece Bilezikli Dirsek Orta Cam

80x30 Ellipse 90 Degree Middle Glass Bend With Collar

Angle 90° Pour Main Courante Ovale 80×30 mm Avec Rainure Verre Central

80x30 Codo Curva Con Canal 90º

ME-606

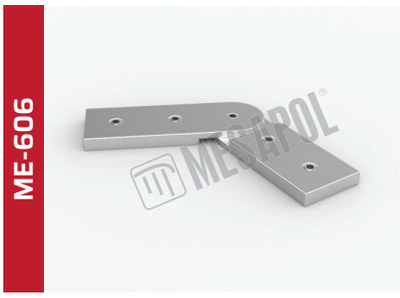

Hareketli İç Köşe Bağlantısı

Adjustable Internal Corner Connection

Pıeces De Raccord Ajustable Pour Angle

Conexión De Esquina Interna Regulable

MK-412

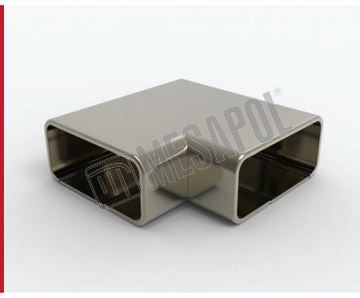

Eko 60 x 25 90 Derece Bilezikli Dirsek

60 x 25 90˚ Bend With Collar Eco

Coude 90° Pour Main Courante 60×25 mm Avec Manchon (Série Éco)

60 x 25 90˚ Codo Curva (Eco)

MK-414

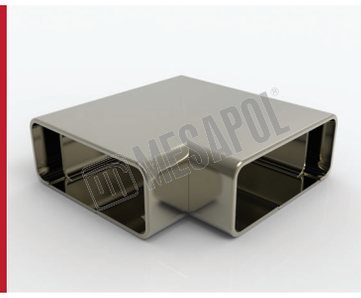

Eko 80 x 30 90 Derece Bilezikli Dirsek

80 x 30 90˚ Bend With Collar Eco

Coude 90° Pour Main Courante 80×30 mm Avec Manchon (Série Éco)

60 x 25 90˚ Codo Curva (Eco)

MK-611

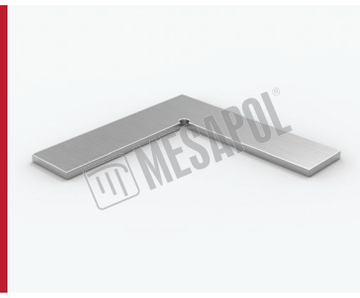

60 x 25 Cam Kanallı Profil Bağlantısı 90 Derece

60 x 25 Channelled Profile Connection 90˚

Pieces Intérieure Pour Jonction Angle 90° De Main Courante 60×25 Mm

60 x 25 Conexión De Perfil Canalizado 90˚

MK-612

60 x 25 Cam Kanallı Profil Bağlantısı 135 Derece

60 x 25 Channelled Profile Connection 135˚

Pieces Intérieure Pour Jonction Angle 135° De Main Courante 60×25 Mm

60 x 25 Conexión De Perfil Canalizado 135˚

MC-203

Hareketli L Cam Mafsal Takımı

Adjustable L Type Glass Connection

Support L Articulé Pour Main Courante Ronde Fixation Sur Verre

Soporte Pasamano Ajustable Redondo / Vidrio

MC-204

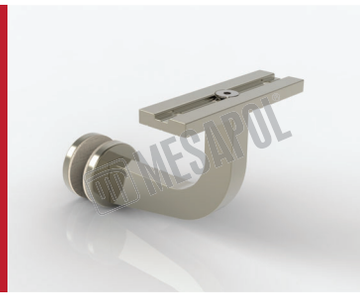

L Cam Mafsal Takımı Kare

L Type Glass Connection For Square System

Support L Pour Main Courante Carré Fixation Sur Verre

Soporte Pasamano Cuadrado / Vidrio

MC-205

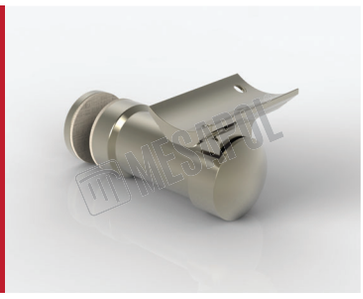

Sabit Cam Mafsal Takımı

Fixed Glass Connection Kit

Support L Fixe Pour Main Courante Fixation Sur Verre

Soporte Pasamano Ajustable / Vidrio

MC-206

Hareketli Cam Mafsal Takımı

Adjustable Glass Connection Kit

Support L Articulé Pour Main Courante Fixation Sur Verre

Soporte Pasamano Ajustable / Vidrio

MC-206/A

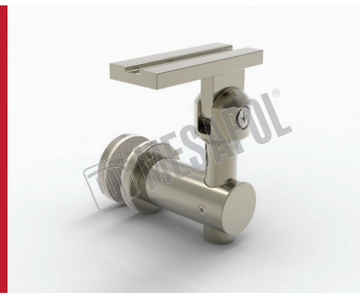

Hareketli Cam Mafsal Takımı

Adjustable Glass Connection Kit

Support L Articulé Pour Main Courante Carré Fixation Sur Verre

Soporte Pasamano Ajustable / Vidrio

MC-111/A

30 x 28 Bilezik

30 x 28 Collar

Manchon

30 x 28 Embellecedor De Union

ME-503

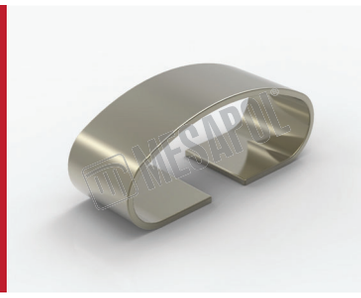

80 x 30 Elips Bilezik Orta Cam

80 x 30 Ellipse Middle Glass Collar

Manchon pour main courante ovale 80×30 mm avec rainure verre central

80 x 30 elipse embellecedor union / con canal

MK-504

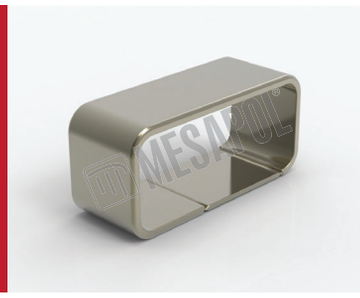

60 x 25 Bilezik

60 x 25 Collar

Manchon Main Courante 60 × 25 Mm

60 x 25 Embellecedor Union

MK-505

80 x 30 Bilezik
80 x 30 Collar
Manchon Main Courante 80 × 30 mm
80 x 30 Embellecedor Union

M15-02

50'lik Bilezik
50 mm Collar
Manchon tube 50 mm
50 mm Embellecedor de union de pasamanos

M17-02

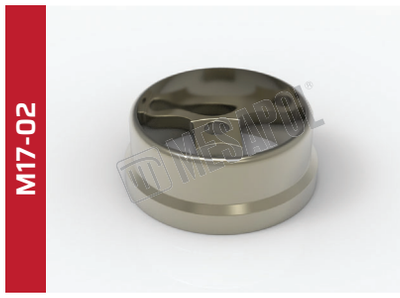

50'lık Boru Flanşı
50 mm Pipe Flange
Départ murale pour tube 50 mm
50 mm final soporte fijación pasamano

M17-06

50'lik Üç Delikli Boru Flanşı
50 mm Pipe Three Hole Flange
Départ murale pour tube 50 mm avec 3 visseries
50 mm final soporte fijación pasamano con tres agujero

M17-06/A

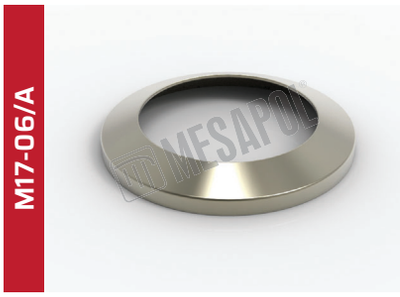

50'lik Üç Delikli Boru Flanş Kapağı
Washer Of 50 mm Three Hole Flange
Cache Départ murale pour tube 50 mm
Arendela de 50 mm final soporte

MC-104/A

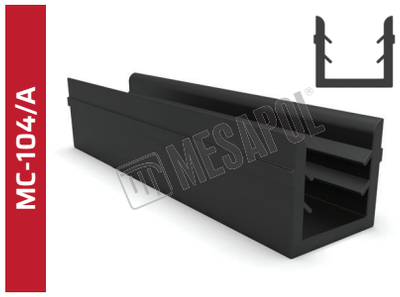

16 mm Üst Profil Fitili (1 mt)
16 mm Upper Profile Gasket (1 mt)
16 mm Joint De Main Courante Pour Verre (1 mt)
16 mm Goma Para Perfil Pasamano (1 mt)

MC-104/B

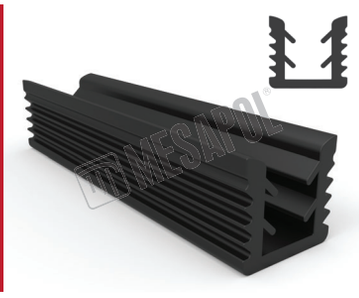

12 mm Cam Fitili (1 mt)
12 mm Upper Profile Gasket (1 mt)
12 mm Joint De Main Courante Pour Verre (1 mt)
12 mm Goma Para Perfil Pasamano (1 mt)

MC-104/C

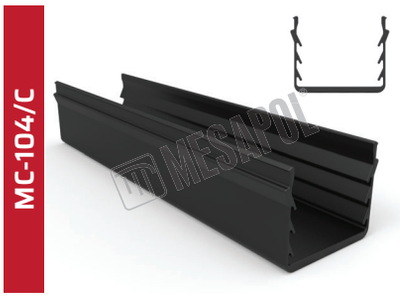

20 mm Cam Fitili (1 mt)
20 mm Upper Profile Gasket (1 mt)
20 mm Joint De Main Courante Pour Verre (1 mt)
20 mm Goma Para Perfil Pasamano (1 mt)

MK-613/A

8 - 10 mm Cam Fitili Diş (1 mt)
8 - 10 mm External Glass Gasket (1mt)
8 - 10 mm Joint de vitrage extérieur (1 mt)
8-10 mm goma de vidrio externa (1 mt)

MK-613/B

10 mm Cam Fitili İç (1 mt)
10 mm Glazing Gasket Inside (1 mt)
10 mm Joint de vitrage intérieur (1 mt)
10 mm goma de vidrio interno (1 mt)

MK-613/D

8 mm Cam Fitili İç (1 mt)
8 mm Glazing Gasket Inside (1 mt)
8 mm Joint de vitrage intérieur (1 mt)
8 mm goma de vidrio interno (1 mt)

CAM KORKULUK SİSTEMLERİ
GLASS BALUSTRADE SYSTEMS
SYSTÈMES EN VERRE
SİSTEMAS DE VİDRİOS

MESAPOL®
Korkuluk Sistemleri

www.mesapol.com

MESAPOL®
Korkuluk Sistemleri

MESA
ALÜMİNYUM ve İNŞAAT SAN. TİC. LTD. ŞTİ.

Merkez : Yukarı Dudullu Mah. İmes San. Sit. D Blok
403 Sok. No:15 Ümraniye - İstanbul / Turkey
Tel.: (+90) 444 34 24
Fax.: (+90) 216 540 40 81
e-mail: info@mesapol.com

Fabrika : İst. Tuzla Kimya San. Org. San. Bölgesi
Melek Aras Bulvarı Aromatik Cad. No:53
Tepeören - Tuzla - İstanbul / Turkey
e-mail: fabrika@mesapol.com